DocuSign Envelope ID: 4D7A9C98-4F30-4D1D-907E-9A92F807637B

PROFESSIONAL ARCHITECTURAL/ENGINEERING SERVICES AGREEMENT

FOR

DEFERRED MAINTENANCE – MECHANICAL SYSTEMS REPLACEMENT FOR CAPITOL COMPLEX BUILDINGS

BETWEEN

THE TEXAS FACILITIES COMMISSION

AND

TOM GREEN AND COMPANY ENGINEERS, INC.

TFC CONTRACT NO. 20-057-000

DocuSign Envelope ID: 4D7A9C98-4F30-4D1D-907E-9A92F807637B

TFC Contract No. 20-057-000
RFQ No. 303-0-00209
Tom Green and Company Engineers, Inc.
Project No. 20-004-5051

PROFESSIONAL ARCHITECTURAL/ENGINEERING SERVICES

AGREEMENT

BETWEEN

THE TEXAS FACILITIES COMMISSION

AND

TOM GREEN AND COMPANY ENGINEERS, INC.

The Texas Facilities Commission (hereinafter referred to as "TFC"), a state agency located at 1711 San Jacinto Boulevard, Austin, Texas 78701, as Owner (as defined in *2015 Uniform General Conditions*, Section 1.28) and Tom Green and Company Engineers, Inc., (hereinafter referred to as "A/E"), located at 3701 Executive Center Drive, Suite 258, Austin, Texas 78731, enter into the following agreement for professional architectural and engineering services (hereinafter referred to as the "Agreement") pursuant to the Professional Services Procurement Act, Tex. Gov't Code Ann. Ch. 2254, Subchapter. A, to be effective as of the Effective Date (as defined below). The project for which A/E agrees to provide Professional Services is generally described as providing deferred maintenance mechanical systems replacement for buildings located in the Capital Complex (hereinafter collectively referred to as the "Project"). Nothing in this Agreement shall be interpreted or construed to make A/E (as defined as defined in *2015 Uniform General Conditions*, Section 1.16) a third-party beneficiary hereunder.

I. DEFINITIONS

1.1. Definitions. Unless specifically provided otherwise herein, all words and phrases in this Agreement in initial caps shall have the meanings set out in the *2015 Uniform General Conditions* (hereinafter referred to as "UGC") and this Section 1.1. In the event of any conflict between the definitions in the UGC, the *2018 Supplementary General Conditions to the 2015 Uniform General Conditions* (hereinafter referred to as the 2018 Supplementary General Conditions"), a copy of each of which is attached hereto and incorporated herein for all purposes as Exhibit A, and Exhibit B, respectively, in the *TFC Architectural/Engineering Guidelines* (as defined below), or in any other document referenced herein and incorporated for all purposes, and the definitions in this Agreement, the definitions used in this Agreement shall control to the extent of the conflict.

1.1.1. *Additional Services* means those services not included in Article II of this Agreement which may be requested by TFC at any time for the duration of this Agreement, as discussed in Section 4.5 below.

1.1.2. *A/E Guidelines* means the TFC 2018 Architectural/Engineering Guidelines Edit Date March 19, 2018, (also referred to as "A/E Guidelines") attached hereto and incorporated herein for all purposes as Exhibit C.

1.1.3. *A/E* Project *Manager* means the individual designated by A/E, and who must be approved by TFC, as the contact person with specific authority to properly supervise and

DocuSign Envelope ID: 4D7A9C98-4F30-4D1D-907E-9A92F807637B

direct the duties and responsibilities of A/E, on behalf of A/E, pursuant to the terms and conditions of this Agreement, and who shall have decision-making authority to bind A/E with respect to the Professional Services for the Project.

1.1.4. *Budget* means the construction budget for the Project which is forecast to be Nine Million and No/100 Dollars ($9,000,000.00) and which may be amended from time to time by TFC as further assessments, design and construction manager cost estimates are provided.

1.1.5. *Building(s)* means the following: (i) the Insurance Building located at 1100 San Jacinto Boulevard; (ii) the Price Daniel Sr. Building, located at 209 West 14th Street; (iii) the Supreme Court Building located at 201 West 14th Street; (iv) the Sam Houston Building located at 201 East 14th Street; and (v) the Tom C. Clark Building located at 205 West 14th Street all of which are subject to this agreement.

1.1.6. *CAD* means AutoCAD DWG format unless specifically provided otherwise herein.

1.1.7. *Certificate of Substantial Completion* means the certificate signed by the Contractor, A/E, and TFC establishing the date of Substantial Completion for the applicable part of the Work, and identifying responsibilities for security and maintenance as set out in UGC, Paragraph 12.1.1.2.

1.1.8. *Close-out and Record Documents Deadline* means the date that is a fixed number of days after the date of delivery of all Close-out Documents to A/E.

1.1.9. *Close-out Documents* has the same meaning as defined in UGC, Section 1.10 and includes the Contractor's marked-up "as-builts."

1.1.10. *Communication Protocol* means the communication and tracking procedures to be utilized for interaction and reporting between TFC, Contractors, Subcontractors, and A/E, including but not limited to, the use of any EPMCS utilized by TFC for the Project.

1.1.11. *Consideration* means the funds and any and all other forms of valid, legal consideration as discussed in Article IV of this Agreement.

1.1.12. *Construction Costs* means all hard and soft costs for labor, materials, fees, and other similar costs and expenses required to complete the Project and prepared in the format promulgated by the Construction Specifications Institute.

1.1.13. *Construction Documents* has the same meaning as defined in UGC, Section 1.17 that in TFC's sole opinion are in satisfactory quality and detail.

1.1.14. *DD Documents* means the design development documents, i.e., such plans, elevations, and such other drawings, calculations, and outline specifications that, in TFC's sole opinion, are of such quality and detail that enable TFC to fix and illustrate the size and character of the entire Project in its essentials as to kinds of materials and assembly details and type of structure and to coordinate the interface of all architectural and structural

DocuSign Envelope ID: 4D7A9C98-4F30-4D1D-907E-9A92F807637B

elements with all building systems.

1.1.15. *Deliverables* means any and all Drawings, Specifications, photos, designs, studies, sketches, computer programs, reports, and other Professional Services, which are specified to be delivered by A/E pursuant to the terms of this Agreement.

1.1.16. *Design Program* means, collectively, the overall goals and design objectives of the Project, the aesthetic considerations, the functional requirements including: (i) allocations of space with uses and adjacency relationships for all areas/spaces; and (ii) operational objectives and such standards of design that TFC may require for all architectural and engineering disciplines in the design and construction of the Project.

1.1.17. *Effective Date* means the date that the last signature of a party is affixed hereto.

1.1.18. *EPMCS* means electronic project management control system.

1.1.19. *Final Inspection* means the same process and procedure described in UGC, Subsection 12.1.2.

1.1.20. *Final Inspection Deadline* means the date that is thirty (30) days after the Substantial Completion Inspection, and by which date A/E must conduct a Final Inspection.

1.1.21. *Governmental Authorities* means all federal, state, and local governmental entities having jurisdiction over the Project, and the A/E.

1.1.22. *HUB Compliance Reporting System* means the Texas Facilities Commission Historically Underutilized Business ("HUB") online reporting system located at https://tfc.gob2g.com. The HUB Compliance Reporting System is used to maintain business records documenting compliance with the HUB Subcontracting Plan ("HSP") by submission of monthly Progress Assessment Reports ("PARs"). See Section 11.3, below.

1.1.23. *Initial Conceptual Drawings* means initial concept drawings and block diagrams that, in TFC's sole opinion, are of such quality and detail to enable TFC to establish design direction.

1.1.24. *Laws and Regulations* means any and all applicable laws, statutes, rules, regulations, ordinances, codes, and orders of any and all Governmental Authorities, including those governing labor, equal employment opportunity, safety, and environmental protection, including but not limited to, all applicable requirements of Title III of the Americans with Disabilities Act and the Texas Architectural Barriers Act and Texas Accessibility Standards found in Texas Government Code, Chapter 469.

1.1.25. *MEP Systems means mechanical, electrical, and plumbing systems.*

1.1.26. *Notice of Authorization (or "NOA")* means the written authorization to proceed to the next phase of development of Construction Documents. Notice of Authorization is to be distinguished from a Notice to Proceed.

DocuSign Envelope ID: 4D7A9C98-4F30-4D1D-907E-9A92F807637B

1.1.27. *Notice of Termination* means the ten (10) day advance written notice of termination that may be delivered pursuant to the terms of this Agreement.

1.1.28. *Notice to Proceed (or "NTP")* means the written authorization to proceed with commencement of Professional Services that may be delivered to A/E by TFC.

1.1.29. *Order-of-Magnitude Opinion of Probable Construction Cost* means a level one (1) cost estimate to facilitate budgetary and feasibility determinations, based on historical information with adjustments made for specific project conditions, wherein estimates are based on costs per square foot, number of rooms/seats, and the like. Project information required for estimates at this level include a general functional description, schematic layout, geographic location, size expressed as building area, numbers of people, seats, and the like, and intended use.

1.1.30. *PAR* means the progress assessment report in such form as is prescribed by TFC and which has the same meaning as defined in UGC, Section 1.31.

1.1.31. *Pay Application* means the application for payment submitted by A/E as discussed in Article IV below.

1.1.32. *Periodic Reports* means the written reports required to be submitted to TFC by A/E, which reports shall be compiled and submitted in such form as prescribed by TFC.

1.1.33. *Person* means an individual, firm, partnership, corporation, association and any other legally recognized entity.

1.1.34. *Post-Final Inspection Punchlist* means the punchlist of items that A/E will deliver to Contractor that sets out any part of the Work that was not corrected or completed in accordance with the Contract Documents as of the Final Inspection.

1.1.35. *Post-Final Inspection Punchlist Deadline* means the date that is a fixed number of days after the date by which A/E shall deliver any Post-Final Inspection Punchlist to Contractor.

1.1.36. *Pre-Design Deadline* means the date that is a fixed number of days after delivery of a Notice to Proceed, and by which date A/E shall (i) complete all the Pre-Design Tasks, and (ii) prepare and deliver the Pre-Design Task Reports to TFC.

1.1.37. *Pre-Design Task Report* means a comprehensive report(s) that sets forth the results of, and answers to, each of the Pre-Design Tasks discussed in Article II.

1.1.38. *Pre-Design Tasks* means the mobilization and pre-design services to be provided to TFC as discussed in Article II.

1.1.39. *Pre-Final Inspection Punchlist* means the list of any unresolved punchlist items that A/E will deliver to Contractor when a Certificate of Substantial Completion is delivered by TFC as discussed in UGC, Paragraph 12.1.1.2.

1.1.40. *Pre-Final Inspection Punchlist Deadline* means the date that is a fixed

DocuSign Envelope ID: 4D7A9C98-4F30-4D1D-907E-9A92F807637B

number of days after the completion of the Substantial Completion Inspection, and by which date A/E shall prepare and deliver a proposed Post-Substantial Completion Inspection Punchlist to TFC.

1.1.41. *Professional Services* means (i) professional architectural services; and/or (ii) professional engineering services as defined in Texas Government Code, Chapter 2254, Subchapter A, the scope of both of which is set out in Article II below.

1.1.42. *Professional Services Schedule* (hereinafter sometimes referred to as the "Schedule") means the schedule/timeline set out in Exhibit D, and which schedule/timeline sets out the deadlines in terms of a fixed number of days after a preceding deadline for completion and delivery of discrete portions of the Professional Services, which deadlines shall be calculated from the effective date of a Notice to Proceed. At the discretion of the TFC Project Manager and as mutually agreed upon with A/E, the Professional Services Schedule may be revised and defined with more detail as the project develops. Exhibit D attached hereto and incorporated herein for all purposes.

1.1.42.1. The Parties acknowledge that upon execution of this Agreement, the Schedule will not reflect the date of issuance of the NTP, nor whether the Project will be completed as a single package or in multiple combinations of packages. At such time that an NTP is issued, TFC shall enter said date into the Schedule, which will result in the Professional Services Schedule for such package being filled-in with specific deadlines.

1.1.42.2. Upon entry of the date of issuance of the NTP, the Professional Services Schedule, as revised, shall become, without further notice or action, the effective Professional Services Schedule, and said revised Schedule shall be considered substituted for the original Professional Services Schedule, and shall be added to the Exhibit D.

1.1.43. *Project* means as stated above and includes each component design/construction package that may be prescribed by TFC.

1.1.44. *Project Analysis* has the same meaning as defined in Texas Government Code, Section 2166.001(5).

1.1.45. *Reimbursable Expenses* means those reasonable and necessary out-of-pocket costs and expenses incurred by A/E for the provision of the Professional Services that are approved by TFC.

1.1.46. *RFI* means a request for information as defined in UGC, Section 1.35.

1.1.47. *RFI Response* means a written clarification, instruction, and/or interpretation, including, but not necessarily limited to, an architect's supplemental instructions issued in response to an RFI, which response must be consistent with the intent of the Construction Documents.

1.1.48. *RFI Response Deadline* means the date that is seven (7) calendar days after receipt, or uploading, of an RFI, and by which date A/E must deliver an RFI Response to Contractor.

DocuSign Envelope ID: 4D7A9C98-4F30-4D1D-907E-9A92F807637B

1.1.49. *Schematic Design Drawings* means, at a minimum, a Site development plan, building plans, elevations, sections, and perspective sketches sufficient to convey comprehensive design intent.

1.1.50. *Schematic Design Package* means the combination of (i) Schematic Design Drawings; (ii) an outline summary of the areas within the proposed Project, such summary corresponding to the general categories in the space allocation outlined in the Design Program;
(iii) a description of the building and general Site development that shall include an overview of proposed exterior architectural materials and structural systems together with the MEP Systems and services being contemplated; and (iv) an Order-of-Magnitude Opinion of Probable Construction Cost that demonstrates conformity with the Budget, all that in TFC's sole opinion must be in satisfactory quality and detail.

1.1.51. *Scope of Services* means the Professional Services as set out in Article II below.

1.1.52. *Site* means the lands, areas, and/or buildings indicated in the Contract Documents as being furnished by TFC upon which the Work is to be performed, including rights-of-way and easements for access thereto, and such other lands furnished by TFC which are designated for the use of the Contractor.

1.1.53. *Subcontract* means any agreements between A/E and a Subcontractor.

1.1.54. *Subcontractor* means any Person that enters into an agreement with A/E to perform any part of the Professional Services.

1.1.55. *Substantial Completion Inspection* means the process and procedure described in UGC, Subsection 12.1.1.

1.1.56. *Substantial Completion Inspection Deadline* means the date that is a fixed number of days after proper written notification is delivered to TFC and A/E by Contractor that Contractor has fully satisfied the requirements set out in UGC, Paragraph 12.1.1.1, and by which date A/E must conduct a Substantial Completion Inspection.

1.1.57. *TDLR* means the Texas Department of Licensing and Regulations.

1.1.58. *TFC Project Manager* means the individual designated by TFC as the owner's designated representative with the direct responsibility to properly supervise the design and construction of the Project, and the services being provided pursuant to this Agreement on behalf of TFC, including, but not limited to, (i) serving as the point of contact between TFC, the Using Agency (if any), and A/E; and (ii) supervising TFC's review and approval of the Professional Services.

1.1.59. *Using Agency* has the same meaning as defined in Texas Government Code, Section 2166.001(10).

1.1.60. *Utilities* means water, sewer, gas, electric, telecom, cable, and like services.

DocuSign Envelope ID: 4D7A9C98-4F30-4D1D-907E-9A92F807637B

1.1.61. *Utility Providers* means any and all entities that TFC desires to provide Utilities to the Project.

1.1.62. *Warranty Report* means the comprehensive report of the findings of A/E pursuant to the inspections, and which must include, but not be necessarily limited to, a list of the items needing replacement, correction, or repair.

1.1.63. *Warranty Report Deadline* means the date that is three hundred thirty-five (335) days after the date that a Certificate of Substantial Completion has been issued as to the Work, or a discrete portion thereof, and by which date A/E shall deliver the warranty and guarantee phase services.

1.1.64. *Work* means the administration, procurement, materials, equipment, testing, and all services necessary for A/E, and/or its agents, to fulfill A/E's obligations under this Agreement.

II. SCOPE OF SERVICES

2.1. Scope of Services. A/E agrees to timely deliver the Professional Services described below pursuant to the Professional Services Schedule.

2.1.1. Pre-Design Phase. No later than the Pre-Design Deadline, A/E shall timely deliver the following Pre-Design Tasks to TFC.

2.1.1.1. Consult with staff of TFC, and with any representatives of the Using Agency as may be directed by TFC, and become thoroughly familiar with (i) the Project Analysis, or the equivalent thereof, and (ii) the Design Program.

2.1.1.2. Inspect and timely become thoroughly familiar with the Site for the Project.

2.1.1.3. Review and become thoroughly familiar with any and all relevant and existing Project, Site, and facilities studies.

2.1.1.4. Review and become thoroughly familiar with the Budget proposed by TFC and advise TFC if, in the opinion of A/E, the Budget is adequate in terms of categories and values so as to allow for the design and timely construction of the Project as contemplated. If, in the opinion of A/E, the Budget is adequate, A/E shall confirm in writing its ability to prepare the DD Documents that will comply with the Design Program parameters and the Budget. If, however, in the opinion of A/E, the Budget proposed by TFC is inadequate or insufficient, the parties shall diligently pursue making appropriate adjustments as would be necessary to enable A/E to confirm the adequacy of the Budget. If such efforts should fail, TFC, at its option, may (i) waive the provisions of this subsection; or (ii) terminate this Agreement. The parties acknowledge and agree that subsequent changes in Design Program or scope of the Project may be cause to modify and/or amend the Budget. Any such modification or amendment to the Budget must be authorized by TFC in writing.

2.1.1.5. Identify all codes, rules, regulations and all other Site-related requirements, including, but not limited to, environmental and/or traffic impact studies that may affect the timely design and construction of the Project.

DocuSign Envelope ID: 4D7A9C98-4F30-4D1D-907E-9A92F807637B

2.1.1.6. Interface with all Utility Providers as is reasonably necessary in order to determine the necessary specifications for connecting all Utilities to the Project.

2.1.1.7. Receive and become familiar with requirements of the technical and design standards of TFC and the Using Agency, including, but not limited to, the A/E Guidelines.

2.1.1.8. Determine and identify to TFC which additional Subcontractor(s), if any, that are not engaged, or to be engaged, by A/E pursuant to this Agreement, will be necessary to complement the Professional Services in order to fulfill requirements of this Agreement.

2.1.1.9. Coordinate the manner of implementing the CAD system and the EPMCS that will be utilized by TFC throughout the design and construction of the Project.

2.1.1.10. If requested, assign appropriate A/E staff to receive instruction regarding the use of the EPMCS to be utilized by TFC.

2.1.1.11. Deliver a Pre-Design Task Report to TFC. Upon consent of TFC, A/E may deliver one (1) amendment to the Pre-Design Task Report no later than the Pre-Design Deadline.

2.1.2. Owner Coordinated Document Review Process. A/E agrees to timely deliver the "Owner Coordinated Document Review Process" as follows.

2.1.2.1. During the design phase of the Project, the design schedule shall accommodate a periodic review of the Construction Documents at various milestones, to be coordinated by TFC, at the following milestones and in the sequential order listed: (i) Initial Conceptual Drawings; (ii) Schematic Design; (iii) Design Development; (iv) 65% Construction Documents; (v) 95% Construction Documents; and (vi) 100% Construction Documents.

2.1.2.2. Each review shall include the following steps to comprise a complete review for each milestone listed above.

2.1.2.2.1. The A/E shall have a fixed number of days after TFC's notice of authorization to A/E to proceed with the next phase of design. The fixed number of days for development of each phase of design is as follows: (i) Assessment, one hundred forty-eight (148) calendar days; (ii) Schematic Design, eighty (80) calendar days; (iii) 65 % Construction Documents, sixty-three (63) calendar days; (iv) 90% Construction Documents, forty-two (42) calendar days; (v) 100% Construction Documents, twenty-one (21) calendar days. The last day of each design phase duration or the first weekday thereafter is the A/E deadline for submitting the design phase deliverables for review.

2.1.2.2.2. TFC, A/E and CMR shall meet to review the milestone submittal, five (5) calendar days or the first weekday thereafter following the A/E deadline.

2.1.2.2.3. The formal review comments and deadline is the date occurring five (5) calendar days or the first weekday thereafter following the review meeting upon which TFC shall prepare and deliver TFC comments to A/E and CMR; and CMR shall prepare and deliver CMR comments to TFC and A/E.

DocuSign Envelope ID: 4D7A9C98-4F30-4D1D-907E-9A92F807637B

2.1.2.2.4. The A/E reply and deadline is the date occurring five (5) calendar days or the first weekday thereafter following A/E's receipt of TFC and CMR formal review comments upon which A/E shall provide written evidence that, in TFC's sole discretion, resolves all TFC and CMR formal comments.

2.1.2.2.5. The A/E's and/or CMR's Cost Estimate (as applicable to the A/E's scope of work) and deadline is the date occurring five (5) calendar days or the first weekday thereafter following delivery of formal review comments to A/E upon which CMR and/or A/E shall prepare and deliver to TFC Cost Estimates in increasing detail and refinement updated through the review of the 100% Construction Documents. Cost Estimates for reviews through Design Development phase shall be provided in ASTM UNIFORMAT II. Cost Estimates for reviews in the Construction Document phase shall be provided using the Construction Specifications Institute MasterFormat™.

2.1.2.2.6. If updates to cost estimate exceed the Budget by more than twenty percent (20%) for Schematic Design, fifteen percent (15%) for Design Development, ten percent (10%) for 65% Construction Documents and five percent (5%) for 95% Construction Documents, A/E shall consult with TFC to identify potential design and/or Specification modifications that could result in the cost estimate being in compliance with the Budget. Approved modifications shall be incorporated into subsequent document submittals at no cost to TFC.

2.1.3. Design Development Phase.

2.1.3.1. All DD Documents must comply with all Laws and Regulations of all Governmental Authorities.

2.1.3.2. Said DD Documents shall be based upon reliable and accurate calculations that appropriately determine all architectural and engineering components of the Project, and shall include, but not be limited to the following:

2.1.3.2.1. design criteria for all proposed clearing and grubbing, on-site and off-site drainage and erosion control, and for any other grade and subgrade Site preparation and erosion control required by any Governmental Authorities;

2.1.3.2.2. design criteria for connection to all proposed temporary and permanent on-site and off-site Utilities;

2.1.3.2.3. design criteria for the proposed structural system, including the rationale for all determinations, all design loads for floor, roof, and lateral loads;

2.1.3.2.4. design criteria for the proposed heating, ventilation and air conditioning (hereinafter referred to as "HVAC") system and single line layout of conveyance systems;

DocuSign Envelope ID: 4D7A9C98-4F30-4D1D-907E-9A92F807637B

2.1.3.2.5. design criteria for the proposed electrical system including reserve capacity;

2.1.3.2.6. an evaluation of energy conservation alternatives, and the filing of the Energy Conservation Design Standard Compliance Statement with the State Energy Conservation Office and the Texas Comptroller of Public Accounts; and

2.1.3.2.7. copies of all manufacturers' documentation that illustrates the proposed materials, equipment and warranties to be specified for the Project.

2.1.3.3. Submit all documents required by TDLR, as TFC's authorized agent, and obtain TDLR's determination of whether the Project is designed in compliance with applicable requirements of TDLR. A/E shall immediately deliver a copy of any determination of compliance or noncompliance by TDLR to TFC.

2.1.4. A/E Delivers Proposed 100% Complete Construction Documents and Updated Cost Estimate. No later than the Construction Documents–100% A/E Deadline, and based on the approved ninety percent (90%) complete Construction Documents, A/E shall prepare and deliver to TFC:

2.1.4.1. the proposed one hundred percent (100%) complete Construction Documents; and

2.1.4.2. the Construction Documents-100% Cost Estimate. If such estimate exceeds the Budget, A/E shall consult with TFC to identify further potential design and/or Specification modifications that could result in the estimate being in compliance with the Budget. Approved modifications shall be incorporated into the Construction Documents at no cost to TFC in the event TFC determines in its sole discretion that such changes are the responsibility of A/E.

2.1.4.3. Each of the foregoing deliverables shall be submitted via disk and shall be appropriately labeled to include identification of the software program (and version thereof) utilized.

2.1.4.3.1. All Drawings shall be organized within the layering system in accordance with the A/E Guidelines.

2.1.4.3.2. Layer format and names shall be in accordance with the A/E Guidelines.

2.1.4.3.3. All electronic data shall include an organized indexing system and/or a table of contents sufficiently detailed as to each discrete subject matter so as to allow for easy identification and location of each file or page of information.

2.1.4.4. Upon written request by TFC, A/E shall prepare the Construction Documents so as to enable the various phases of the Work to be awarded pursuant to separate contracts, the preparation of which shall constitute an Additional Service.

DocuSign Envelope ID: 4D7A9C98-4F30-4D1D-907E-9A92F807637B

2.1.4.5. All Drawings and Specifications shall be appropriately signed, sealed, and dated by the responsible architect(s) and engineer(s).

2.1.4.6. The Construction Documents must comply with all Laws and Regulations.

2.1.4.6.1. All Drawings and Specifications must, in conspicuous text, expressly prohibit any electrical systems or equipment from being energized or otherwise activated without a minimum of twenty-four (24) hour advance notice to TFC.

2.1.4.6.2. A/E shall submit all documents required to secure approval of all Governmental Authorities. All requests for reimbursement for any direct costs associated with submitting documents to such authorities and for permit fees shall be governed by Article IV of this Agreement.

2.1.4.7. No Unauthorized Release. No Construction Documents shall be issued, delivered, or released for any purpose without the prior written consent of TFC.

2.1.5. Contract Bidding and Award Phase. Upon receipt of an applicable written authorization to proceed, and only in such event, A/E shall prepare and deliver to TFC the following contract bidding and award phase services for the Project:

2.1.5.1. Delivery of Documents. Unless otherwise instructed by TFC, deliver three (3) sets of the approved Construction Documents to TFC, any additional copies of which shall be considered a Reimbursable Expense.

2.1.5.2. Assist During Bidding and Award Phase. Assist TFC in the bidding and award phase by delivering the following services:

2.1.5.2.1. inform qualified bidders of the solicitation;

2.1.5.2.2. distribute Construction Documents to qualified bidders and to plan rooms specified by TFC;

2.1.5.2.3. submit the appropriate approved Drawings and Specifications to on-line electronic plan rooms as may be specified by TFC, the submission cost of which constitutes a Reimbursable Expense;

2.1.5.2.4. attend all pre-bid meeting(s) conducted by TFC;

2.1.5.2.5. consult with and advise TFC as to any bidder inquiries;
2.1.5.2.6. critically review all submittals; and

2.1.5.2.7. prepare any addenda, amendments, and the like, to the solicitation documents which may become necessary.

DocuSign Envelope ID: 4D7A9C98-4F30-4D1D-907E-9A92F807637B

2.1.5.3. Attend and participate in the evaluation and scoring of all proposals in accordance with TFC processes and procedures, including, but not necessarily limited to, interviewing of bidders, which participation shall not constitute an Additional Service.

2.1.5.4. If the lowest acceptable bid price, as determined by TFC in its absolute and sole discretion, exceeds the Budget and TFC does not amend the Budget, A/E shall consult with TFC in order to identify further potential design and/or Specification modifications which could result in obtaining a bid price that would be in compliance with the Budget. Approved modifications shall be incorporated into the Construction Documents and appropriate copies reissued at no cost to TFC.

2.1.5.5. In the event TFC elects to amend the Budget and allocate such additional funds as necessary to accommodate the lowest acceptable bid and the Project proceeds, there shall be no increase in the amount of the Consideration.

2.1.5.6. In the event A/E receives any inquiries whatsoever from bidders or potential bidders regarding the Project, A/E must refer such inquiries to TFC, Procurement Division (512) 463-0209. A/E is not authorized to provide any comments, answers or other similar responses to such inquiries. All inquiries must be forwarded to TFC for response.

2.1.6. Construction Phase–General Administration of Construction Contract. A/E shall deliver the following management and administration of construction contract(s) services to TFC during the construction phase of the Project as is specified in the UGC and as follows.

2.1.6.1. Perform professional observation and review of the Work in order to determine that all elements and components of the Project are being timely constructed and installed in substantial compliance with the Construction Documents. Such observation and review shall include, at a minimum:

2.1.6.1.1. perform periodic on-site observations of all Work, completed and in progress, and, at least bi-weekly, during all phases of Work;

2.1.6.1.2. such observations shall include, but shall not be limited to, all functions applicable to professional inspections that are described in Texas Government Code, Sections 2166.351(3) and 2166.355;

2.1.6.1.3. if requested by TFC, designate and provide a full-time A/E on- site representative, the provision of which shall constitute an Additional Service;

2.1.6.1.4. no later than the RFI Response Deadline, prepare and deliver an RFI Response for each RFI to Contractor with a copy to TFC. If the subject of the RFI cannot be reasonably answered by this deadline, A/E shall so advise TFC and propose an alternative deadline and the basis for such proposal, the acceptance of which shall be in the sole discretion of TFC. A/E shall make reasonable efforts to answer Contractor's questions and RFIs in the shortest

DocuSign Envelope ID: 4D7A9C98-4F30-4D1D-907E-9A92F807637B

timeframe possible in order to collaborate in the prosecution of the Contractor's Work (as defined in UGC, Section 1.48) on a schedule that recognizes that "TIME IS OF THE ESSENCE";

2.1.6.1.5. conduct timely contract management and administration activities as required herein by utilization of the EPMCS;

2.1.6.1.6. timely review and deliver to TFC and Contractor complete responses within the specified deadlines to the submittals described below. If the deadline cannot be met, A/E shall so advise TFC and Contractor, and propose an alternative deadline and the basis for such proposal, the acceptance of which shall be within the sole discretion of TFC. A/E shall make reasonable efforts to review submittals in the shortest timeframe possible to collaborate in the prosecution of Contractor's Work on a schedule that recognizes that "TIME IS OF THE ESSENCE";

2.1.6.1.6.1. submittals: within fourteen (14) calendar days after receipt;

2.1.6.1.6.2. Applications for Payment: within five (5) calendar days after receipt;

2.1.6.1.6.3. Proposed Change Orders and Unilateral Change Orders: within five (5) days after receipt;

2.1.6.1.6.4. each and every certification for payment issued by A/E shall constitute an express representation that based upon (i) A/E's on-site observation(s) and an evaluation of the Contractor's Pay Application; and (ii) A/E's knowledge and belief:

2.1.6.1.6.4.1. the construction has progressed to the point indicated in the Application for Payment, and in general conformity with the Contract Documents; and

2.1.6.1.6.4.2. A/E has received and approved all testing reports required by the Contract Documents up to the respective Pay Application.

2.1.6.2. Prepare such amended or revised Drawings and/or Specifications as would be necessary to fully and accurately reflect any approved changes. Deliver said amended or revised Drawings and/or Specifications to the Contractor and request a price proposal. Thereafter, A/E shall review the Contractor's proposal and recommend approval or disapproval to TFC.

2.1.6.3. Timely update all Construction Documents as may be necessary to accurately reflect conditions resulting from approved Change Orders so as to be enabled to timely deliver complete and accurate Record Documents.

2.1.6.4. Deliver a Periodic Report to TFC for each observation and review of the Work. Such Periodic Reports must describe in reasonable detail the current status of the following:

2.1.6.4.1. the completed Work in relation to the Work Progress Schedule;

DocuSign Envelope ID: 4D7A9C98-4F30-4D1D-907E-9A92F807637B

2.1.6.4.2. projected completion dates;

2.1.6.4.3. percentage of completion of each discrete subpart of the Work;

2.1.6.4.4. any existing or potential deficiencies and/or discrepancies;

2.1.6.4.5. the status of any revisions or Change Orders; and

2.1.6.4.6. the status of the Record Documents.

2.1.6.5. Subject to the provisions of UGC, Subsection 12.1.1, no later than the Substantial Completion Inspection Deadline, A/E shall conduct a Substantial Completion Inspection of the Work, while accompanied by the TFC Project Manager, to determine whether said portion of the Work has achieved Substantial Completion.

2.1.6.5.1. In the event TFC and A/E conclude that the Work, or any portion thereof, has not been performed or completed in accordance with the Construction Documents, A/E shall prepare and deliver, no later than the Pre-Final Inspection Punchlist Deadline, a Pre-Final Inspection Punchlist to Contractor with a copy to TFC.

2.1.6.5.1.1. A/E shall continue to perform the foregoing described service until TFC can issue an appropriate Certificate of Substantial Completion.

2.1.6.5.1.2. In the event that such continued service be required due to causes outside the A/E's direct control (such as, Contractor's errors in reporting readiness of the Work for Inspection; Contractor prematurely requesting substantial completion inspection; significant deficiencies in the Work unexcused delays in the Work; untested or improper performance of systems; or similar failures performed by Contractor or its agents), such service shall constitute an Additional Service.

2.1.6.5.2. In the event A/E and TFC conclude that the Work, or a discrete and identified phase thereof, has been performed or completed in accordance with the Construction Documents so as to be determined to be substantially complete, TFC shall promptly issue an appropriate Certificate of Substantial Completion as to the completed Work, as provided in UGC, Paragraph 12.1.1.2, and A/E shall promptly take all such steps as are required by TDLR, as TFC's authorized agent, to ensure the Project is completed in compliance with applicable requirements of TDLR including, but not limited to, obtaining a passing inspection by the A/E's Registered Accessibility Specialist. Any provision in the foregoing to the contrary notwithstanding, A/E shall not recommend the issuance of a Certificate of Substantial Completion if, in its reasonable opinion, A/E determines that any of the items to be contained in the Post-Substantial Completion Inspection Punchlist cannot or, in all reasonable likelihood will not be, satisfactorily completed within thirty (30) days of the date of the Substantial Completion Inspection Deadline.

2.1.6.6. Subject to the provisions of UGC, Subsection 12.1.2, and no later than the Final Inspection Deadline, A/E shall conduct a Final Inspection of the Work, while accompanied

DocuSign Envelope ID: 4D7A9C98-4F30-4D1D-907E-9A92F807637B

by the TFC Project Manager, to determine whether all of the Work for the entire Project has been fully completed in accordance with the Construction Documents.

2.1.6.6.1. In the event TFC and A/E conclude that any of the Pre-Final Inspection Punchlist items have not been corrected or completed in accordance with the Construction Documents, A/E shall prepare and deliver, no later than the Post-Final Inspection Punchlist Deadline, a Post-Final Inspection Punchlist to Contractor with a copy to TFC.

2.1.6.6.1.1. A/E shall continue to perform the foregoing described service until TFC can issue a Certificate of Final Completion.

2.1.6.6.1.2. In the event that such continued service be required due to causes outside the A/E's direct control (such as, Contractor's errors in reporting readiness of the Work for Inspection; Contractor prematurely requesting substantial completion inspection; significant deficiencies in the Work; unexcused delays in the Work; untested or improper performance of systems or similar failures performed by Contractor or its agents), such service shall constitute an Additional Service.

2.1.6.6.2. In the event A/E and TFC conclude that all of the Work, or all of the Work in a respective discrete or identified phase, has been corrected or completed in accordance with the Construction Documents, and subject to the prior issuance of a Certificate of Substantial Completion, TFC, with A/E signature as appropriate, shall issue and deliver a Certificate of Final Completion to Contractor.

2.1.6.6.2.1. Issuance of a Certificate of Substantial Completion is a condition precedent to Contractor's right to issue notice that the Work will be ready for final inspection.

2.1.6.6.2.2. Issuance of a Certificate of Final Completion is a condition precedent to Contractor's right to receive Final Payment.

2.1.6.7. No later than the Close-out & Record Documents Deadline, and prior to A/E's delivery of the Application for Final Payment to TFC, A/E shall do the following:

2.1.6.7.1. Obtain, review and inspect all Close-out Documents, guarantees, bonds and all other fiscal surety instruments, and all other documentation required of the Contractor by the Contract Documents to ensure full and complete compliance. Within five (5) days of such confirmation, A/E shall transmit the above-described documentation to TFC.

2.1.6.7.2. Furnish the Record Documents to TFC.
2.1.6.7.3. Furnish one (1) digital copy of all Construction Documents to TFC.

2.1.6.7.3.1. Each disk shall be appropriately labeled to include identification of the software program (and version thereof) utilized.

DocuSign Envelope ID: 4D7A9C98-4F30-4D1D-907E-9A92F807637B

2.1.6.7.3.2. Drawings shall be in CAD format and shall be organized within the layering system in accordance with the A/E Guidelines.

2.1.6.7.3.3. Layer format and names shall be in accordance with the A/E Guidelines.

2.1.6.7.3.4. All electronic data shall include an organized indexing system and/or a table of contents sufficiently detailed as to each discrete subject matter so as to allow for easy identification and location of each file or page of information.

2.1.6.7.3.5. It is expressly acknowledged and agreed that the original disks remain the property of the A/E. If differences between the TFC versions and the A/E versions should subsequently be discovered, the A/E versions shall be deemed originals, absent any fraud, malfeasance, or mutual mistake.

2.1.6.8. Subject to the restrictions set out below, at such time that the Certificate of Final Completion has been issued, A/E shall promptly review and, if in proper form, approve the Application for Final Payment in accordance with the UGC, any Supplementary General Conditions, any Special Conditions, and the Construction Documents.

2.1.6.8.1. In order for an Application for Final Payment to be considered complete and subject to approval, Contractor must submit a fully executed Final Payment checklist in such form as is prescribed by TFC to TFC.

2.1.6.8.2. No approval of an Application for Final Payment is valid and enforceable unless and until the foregoing subparagraph is fully satisfied.

2.1.6.9. In the event of any material conflict between the duties and responsibilities of A/E as set out in the UGC, any Supplementary General Conditions, any Special Conditions, the A/E Guidelines, or in any other document referenced herein and incorporated for all purposes, and this Agreement, the duties and responsibilities specified in this Agreement shall control to the extent of such material conflict.

2.1.7. A/E Services During All Phases. A/E shall timely deliver the following services, as applicable, during all phases for which A/E is obligated to provide Professional Services to TFC.

2.1.7.1. Critically review and closely scrutinize all documents submitted by all third parties.

2.1.7.2. Thoroughly review and closely scrutinize the performance, schedules, and costs of Contractor and all its subcontractors.

2.1.7.3. Critically review and evaluate Contractor's proposed schedule and costs as relevant to each consultant's discipline.

DocuSign Envelope ID: 4D7A9C98-4F30-4D1D-907E-9A92F807637B

2.1.7.4. Maintain work progress and products consistent with the schedules.

2.1.7.5. Provide supplemental information beyond that presented in a submission of documents which may be reasonably requested to assist cost estimating.

2.1.7.6. Promptly communicate with pertinent parties, including topics regarding information needs and responses to needs of other parties.

2.1.7.7. Actively participate in all meetings and/or teleconferences to bring the full measure of A/E's collective experience, expertise and recommendations to the Project as it pertains to the overall project or to a specific discipline.

2.1.7.8. Prepare and deliver all meeting agendas and meeting minutes, field reports, and other similar documentation within one (1) week of the respective work or event, unless directed otherwise by TFC.

2.1.7.9. Answer questions and provide clarifications for the Contractor and its subcontractors to facilitate their thorough examination of all Drawings, Specifications and other documents authored by A/E for accuracy, intended completeness and constructability; and

2.1.7.10. Ensure that A/E Project Manager and any other representative of A/E whose presence is requested by TFC attend all meetings and participate in all conference calls that are scheduled by TFC.

2.1.8. TFC Approvals. Any provisions in this Agreement to the contrary notwithstanding, all consents and/or approvals by TFC shall be in its sole and absolute discretion, and must be in writing.

2.1.8.1. No changes to: (i) the scope of the Professional Services or (ii) the Consideration shall be valid or enforceable unless evidenced by a fully executed written amendment to this Agreement.

2.1.8.2. A/E is not authorized to commence providing any Professional Services to TFC or any Using Agency with respect to the Project unless and until an appropriate Notice to Proceed is delivered by TFC.

2.1.8.3. TFC, including by and through the TFC Project Manager, reserves the right to extend any of the deadlines set out above.

2.1.9. Inspections. TFC hereby reserves the right, if deemed appropriate by TFC in its sole discretion, to conduct reviews or inspections during the course of design and construction of the Project. However, A/E shall not be relieved of any of its obligations arising pursuant to this Agreement. No inspections of the Project conducted by TFC shall reduce the level or extent of A/E's responsibilities arising pursuant to this Agreement. Neither the approval and/or final acceptance of a Project or any Deliverables, the payment of any Pay Application by TFC shall

DocuSign Envelope ID: 4D7A9C98-4F30-4D1D-907E-9A92F807637B

constitute, nor be deemed, a release of A/E's obligation to perform and timely deliver the Professional Services and any Additional Services (i) in a manner consistent with that degree of care and skill ordinarily exercised by members of the same profession currently practicing under similar circumstances; or (ii) as required under this Agreement.

III. TERM AND TERMINATION

3.1. Duration. This Agreement shall be effective as of the Effective Date and shall terminate on August 31, 2022, unless extended by the parties by amendment to this Agreement or terminated earlier, as provided below.

3.2. Early Termination. This Agreement may be terminated by TFC for its convenience, in whole or in part, at any time without cause, upon delivery of a Notice of Termination to A/E at the address of record as specified in this Agreement. Upon receipt of a Notice of Termination, A/E will immediately cease all Professional Services and undertake to terminate any relevant Subcontracts and will incur no further expense related to this Agreement. Such early termination shall be subject to the equitable settlement of the respective interests of the parties accrued up to the date of termination.

IV. CONSIDERATION

4.1. Contract Limit–Fees and Expenses.

4.1.1. Fixed Fee. In exchange for the timely delivery of the Professional Services as specified by this Agreement, A/E shall be paid a fixed fee of One Million Five Hundred Ten Thousand and No/100 Dollars ($1,510,000.00). Any Professional Services performed or delivered by A/E prior to the Effective Date of this Agreement or after its termination cannot be compensated.

4.1.2. Submission of Pay Applications or Invoices. No more frequently than once per month, A/E shall submit a Pay Application to TFC for services performed and reasonable and necessary costs and expenses incurred through the last day of the previous month. TFC agrees to pay A/E in accordance with Chapter 2251 of the Texas Government Code, also known as the "Prompt Payment Act."

4.2. Proportional Payments. Payments shall be made to A/E monthly in proportion to the services performed. The compensation for services shall be at the following cumulative percentages at the completion and acceptance of each of the following phases of the Professional Services.

4.2.1.	Pre-Design:	twelve percent (12%).
4.2.2.	Conceptual Schematic Design:	thirty-nine-percent (39%).
4.2.3.	50% Construction Documents:	sixty-five percent (65%).
4.2.4.	Construction Documents:	seventy-eight percent (78%).

DocuSign Envelope ID: 4D7A9C98-4F30-4D1D-907E-9A92F807637B

4.2.5. Construction Services: one hundred percent (100%).

4.3. Maximum Reimbursable Expenses. Reasonable lodging and traveling expenses shall be considered a Reimbursable Expense under this Agreement when professional and technical personnel of A/E are away from the cities in which they are permanently assigned and are conducting authorized business directly connected with this Agreement. For the purposes of this Agreement, no travel reimbursement shall be made for travel within 100 miles of the location identified as the principal place of business or branch office of A/E, except for overnight stays, which require prior TFC project manager approval. The maximum amount for each Reimbursable Expense for travel and lodging shall be the rates established by the Texas Comptroller of Public Accounts, and outlined in Textravel, *https://fmx.cpa.state.tx.us/fmx/travel/textravel/index.php*, formerly known as the State of Texas Travel Allowance Guide for state employees. No Reimbursable Expenses shall exceed actual cost. In addition to those items specifically identified above as a Reimbursable Expense, permit fees and associated costs, certain other incidental direct expenses including, but not limited to, copying, telephone, data, and express mail services, and rental of special equipment or tools required in connection with provision of the Professional Services for the Project, may constitute a Reimbursable Expense; provided however, A/E must obtain the written approval of TFC prior to incurring the expense. Approval may be granted only under those limited circumstances wherein such costs are not considered normal or customary basic services under this Agreement. All requests for reimbursement must be accompanied by such documentation which, in the judgment of the TFC, allows for complete substantiation of the costs incurred.

4.4. Notice of Depletion. Within seven (7) days of when the accumulated amount of Fees and Reimbursable Expenses reaches eighty percent (80%) of the maximum not-to-exceed contract amount(s), A/E shall deliver written notice thereof to TFC. Nothing herein shall be construed to require TFC to increase the approved maximum not-to-exceed contract amount(s) established pursuant to this Agreement.

4.5. Additional Services. Upon request by TFC for Additional Services, A/E shall prepare and submit a proposal for such Additional Services to TFC for approval. Additional Services shall be performed at a rate negotiated between TFC and A/E and must be approved by the parties by amendment to this Agreement. Any Additional Services performed or delivered by A/E prior to execution of the Agreement or amendment thereto, as applicable, cannot be compensated.

4.6. Payments to Subcontractors. For all services rendered, A/E's payment to Subcontractors is due within ten (10) days after receipt of payment from TFC and, when appropriate in the sole discretion of TFC, TFC may issue joint checks to A/E and Subcontractors.

V. ACKNOWLEDGEMENT, COVENANTS, AND AGREEMENTS

5.1. Acknowledgement, Covenants, and Agreements of TFC. TFC acknowledges, covenants, and agrees, as follows.

5.1.1. TFC Deliverables to A/E. TFC shall provide A/E a copy of, or reasonable access to, the following information and documentation regarding the Project, the substance of which A/E shall incorporate into the DD Documents.

DocuSign Envelope ID: 4D7A9C98-4F30-4D1D-907E-9A92F807637B

5.1.1.1. The UGC.

5.1.1.2. Any Supplementary General Conditions.

5.1.1.3. Any Special Conditions.

5.1.1.4. Sample copies of the following:

5.1.1.4.1. contract forms; and

5.1.1.4. 2. bond forms.

5.1.1.5. Bidding information and instructions.

5.1.1.6. Minimum wage rates.

5.1.1.7. The PAR for inclusion in the Specifications.

5.1.1.8. Any maps and Drawings in the possession of TFC that reflect or depict Site boundaries, recorded easements, topography, utility locations, and such other documents in the possession of TFC that reflect Site conditions and/or restrictions which may impact the design and/or construction of the Project.

5.1.1.9. Any soil reports or traffic impact studies in the possession of TFC.

5.1.1.10. The Project Analysis, or equivalent thereof.

5.1.1.11. The Budget.

5.1.1.12. The Communication Protocol.

5.1.2. TFC Services to A/E. TFC shall provide, or cause to be provided, the following services to A/E.

5.1.2.1. Upon A/E's receipt of general and criminal background check clearance, assist A/E in obtaining such access to the Sites as is reasonably necessary to enable A/E to provide the Professional Services.

5.1.2.2. Designate the TFC Project Manager who will supervise the design and construction of the Project and the services being provided pursuant to this Agreement and the respective Contract Documents.

5.1.2.3. Provide intermediate reviews of the work product of A/E as necessary to allow A/E to proceed with delivery of the Professional Services in a timely manner.

5.2. Acknowledgements. Covenants. and Agreements of A/E. A/E acknowledges, covenants, and agrees as follows.

5.2.1. Timely Delivery of Conforming Services. A/E will, subject to Force Majeure events, as defined in Section 11.13 below, timely provide the Professional Services in conformity

DocuSign Envelope ID: 4D7A9C98-4F30-4D1D-907E-9A92F807637B

with, and as specified in, this Agreement, the UGC, the Supplementary General Conditions, any Special Conditions, and in the Construction Documents.

5.2.2. Modifications. Modifications to the Construction Documents which are made necessary by the errors and/or omissions of A/E shall be corrected by A/E at its sole cost and expense.

5.2.2.1. For purposes of this subsection, an omission is defined as any change or addition to the Construction Documents required to make the Project conform to its original design intent.

5.2.2.2. For purposes of this subsection, an error is defined as any change or addition to the Construction Documents where remediation of previously constructed or installed Work must take place in order to meet code and/or design intent or any omission that is caused by willful misconduct or gross negligence by A/E. In the event that A/E is determined to have been the cause of such an error, A/E shall bear the reasonable construction costs to resolve said error.

5.2.3. Limitation of Authority. A/E agrees that the TFC Project Manager shall not have any express or implied authority to vary or otherwise amend the terms and conditions of this Agreement in any way, or waive strict compliance with the terms and conditions of this Agreement, except as to the deadlines set out in Section 2.1 above, any deviation from which must be evidenced by the TFC Project Manager in writing.

5.2.4. A/E Safety. All A/E's and subcontractors conducting work for TFC shall abide by all OSHA rules and regulations provided by the Department of Labor, OSHA, Code of Federal Regulations, Chapter 29. Employees of A/E and subcontractors shall be trained in accordance with Chapter 29, Occupational Safety and Health Regulations. A/E and subcontractors shall inform the Contract Administrator of their Hazardous Electrical Energy Control, Lockout/Tag-out Procedure. A/E's procedure must meet or exceed TFC's procedure as determined by the Contract Administrator. Work shall not be done on energized electrical circuits, components or equipment. When de-energizing is impractical due to possible harm to personnel, equipment or facility damage, negative onsite or offsite environmental impact, or business interruption Contractor must follow OSHA requirements as detailed in OSHA Regulations 1910.331 – 1910.399.

5.2.5. Cooperation. All project managers, employees, and associated Subcontractors shall cooperate with and assist each other and all other Contractors and design professionals retained by TFC.

5.2.6. A/E Cooperation. A/E agrees to conduct all of its services under this Agreement by and through appropriate communications with the Contract Administrator. No work, installation or other services shall be undertaken by A/E except with the prior written direction of the Contract Administrator. A/E understands and agrees that work, installation or any other service performed without the prior written direction of the Contract Administrator is work outside the scope of this Agreement and shall be performed exclusively at A/E's risk. A/E agrees to employ competent personnel meeting the requirements outlined in the specifications,

DocuSign Envelope ID: 4D7A9C98-4F30-4D1D-907E-9A92F807637B

who shall be satisfactory to TFC. Personnel assigned to perform services under this Agreement may not be reassigned without the prior written approval by the Contract Administrator. TFC may request that A/E replace unsatisfactory personnel, which request shall not be unreasonably denied. A/E agrees to cooperate and coordinate its work with that of other Contractors retained by owner. Upon discovery of an apparent conflict in the sequencing of work with another Contractor, A/E shall report the concern to the Contract Administrator who will resolve the conflict.

5.2.7. E-Verify. By entering into this Agreement, A/E certifies and ensures that it utilizes and will continue to utilize, for the term of this Agreement, the U.S. Department of Homeland Security's E-Verify system, in accordance with the U.S. Department of Homeland Security's rules, to determine the eligibility of: all persons employed to perform duties within the State of Texas, during the term of the Agreement; and all persons (including subcontractors) assigned by the A/E to perform work pursuant to the Agreement, within the United States of America. A/E shall provide, upon request of TFC and if available, an electronic or hardcopy screenshot of the confirmation or tentative non-confirmation screen containing the E-Verify case verification number for attachment to the Form I-9 for the three (3) most recent hires that match the criteria above, by the A/E, and A/E's subcontractors, as proof that this provision is being followed. If this certification is falsely made, the Agreement may be immediately terminated, at the discretion of TFC, and at no fault to TFC, with no prior notification. A/E shall also be responsible for the costs of any re-solicitation that TFC must undertake to replace the terminated Agreement. For persons not eligible for E-Verify screening, A/E (including sub-contractors) shall provide, upon request by TFC, another form of documentation of proof of eligibility to work in the United States of America.

5.2.8. Identification of Project Manager and All Subcontractors. The Project Manager identified in the initial List of A/E Project Manager and Subcontractors (hereinafter referred to as the "List"), attached hereto an incorporated herein by reference for all purposes as Exhibit E, will supervise the efforts of Contractor to timely provide TFC with the Construction Services.

5.2.8.1. The Project Manager must be committed to the Project on a full- time basis. TFC reserves the right to approve the appointment of the Project Manager and to demand that the Project Manager, and any of A/E's employees or Subcontractors, be removed and replaced if, in the sole opinion of TFC, their performance on this Project or any other Projects, is and/or was not adequate or their continued involvement with the Project will, is, or has become, detrimental to the timely and successful completion of the Project, including but not limited to, for such reasons as: (i) any past or present violation of any statute, rule, regulation or ordinance of any city, county, the State of Texas, or the United States, or any other Laws and Regulations; (ii) TFC's reasonable belief that failure to obtain an acceptable criminal background check will occur; (iii) prior unsatisfactory performance on other TFC projects; and (iv) any other like reasons.

5.2.8.2. The Project Manager and Subcontractors identified in the List shall not be removed or replaced by A/E, nor shall any other Subcontractors be engaged by A/E, unless prior written consent is obtained from TFC, which consent shall not be unreasonably withheld, conditioned, or delayed.

DocuSign Envelope ID: 4D7A9C98-4F30-4D1D-907E-9A92F807637B

5.2.9. Buy Texas. If A/E is authorized to make purchases under this Agreement, A/E certifies that A/E will buy Texas products, services, and materials when available at a comparable price and in a comparable period of time pursuant to Texas Government Code, Chapter 2155.

5.2.10. No Assumption. No approvals or acceptances by, or on behalf of, TFC shall be deemed to be an assumption of any responsibility by TFC for any defect, error or omission in said Deliverables or Professional Services.

5.2.11. No Guaranty. A/E does not control or guarantee the performance of any Contractor, provided however, A/E shall promptly notify TFC of any observation of a Contractor's or subcontractor's failure to perform their duties and responsibilities in accordance with the Construction Documents and Work Progress Schedule, and shall recommend to TFC candidate measure(s) to correct such failures.

5.2.12. Debts or Delinquencies Owed to the State. Any payment due under this Agreement may be withheld and applied toward payment of any debt that is owed to the State of Texas including, but not limited to, delinquent taxes and child support pursuant to Texas Government Code, Section 43.055.

5.2.13. General and Criminal Background Check.

5.2.13.1. A/E represents and warrants that neither A/E nor any of A/E's employees, have been convicted of a felony criminal offense, or of a crime involving moral turpitude, or that, if such a conviction has occurred, A/E has fully advised TFC in writing as to the facts and circumstances surrounding the conviction(s).

5.2.13.2. All of A/E's employees and Subcontractors that will perform any Professional Services on-site at a state-owned property shall be subject to a criminal background check. Any expense associated with such criminal background check shall be borne by A/E.

5.2.13.2.1. All criminal background check forms for all of A/E employees and Subcontractors that will initially commence any work on-site must be fully completed and submitted to TFC within fifteen (15) days of the date of the notice of award, and the process thereafter must be diligently pursued by A/E.

5.2.13.2.2. The process must be satisfactorily completed for every employee and Subcontractor before they perform services at the Site.

5.2.13.2.3. All criminal background checks must be accomplished by the Texas Department of Public Safety (hereinafter referred to as "DPS"), which includes fingerprint processing by an independent third-party company selected by DPS. Upon receipt of the fingerprints of A/E's employees and/or Subcontractors, DPS or TFC, will adjudicate the results of the criminal background searches in accordance with the criteria set forth in the *Texas Facilities Commission Criminal Background Checks and Application Guidelines*, a copy of which is attached hereto and incorporated herein for all purposes as Exhibit F. A/E's or Subcontractor's failure to timely secure criminal background check clearance shall not be

DocuSign Envelope ID: 4D7A9C98-4F30-4D1D-907E-9A92F807637B

considered a legitimate delay in the Professional Services Schedule.

5.2.14. Equal Opportunity. A/E shall not discriminate against any employee or applicant for employment because of race, color, religion, sex, age, national origin, disability, political affiliation, or religious belief. A/E shall take affirmative action to ensure that applicants are employed and that employees are treated during employment without regard to their race, color, religion, sex, religion, age or national origin. Such action shall include, but not be limited to, the following: employment, upgrading, demotion, or transfer; recruitment or recruitment advertising; layoff or termination; rates of pay or other forms of compensation; and selection for training, including apprenticeship. A/E shall post in conspicuous places, available to employees or applicants for employment, notices to be provided setting forth the provisions of this nondiscrimination subsection. A/E shall include the above provisions in all Subcontracts pertaining to the Professional Services.

5.2.15. No Advertising. A/E shall not advertise that it is doing business with TFC or use this Agreement as any sort of marketing or sales tool without the prior written consent of TFC.

5.2.16. No Warranties by TFC. A/E acknowledges that any and all tests, maps, reports, and drawings and any other documentation (hereinafter referred to collectively as "Reports") in the possession of TFC that reflect or depict any Site boundaries, recorded easements, topography, utility locations, and other Site conditions and/or restrictions which may impact A/E's prosecution of the Work were prepared solely for the benefit of TFC, and that A/E shall have no right to rely upon such and that any reliance thereon shall be at A/E's own risk. **TFC HEREBY DISCLAIMS ANY EXPRESS OR IMPLIED WARRANTIES AS TO THE ACCURACY OR COMPLETENESS OF THE ABOVE-MENTIONED REPORTS**.

5.2.17. No Outsourcing. All services under this Agreement shall be performed in the principal offices of the A/E and its consultants. If A/E or consultant offices exist out of the State of Texas, services shall be performed in offices within Texas in so much as proper expertise and timeliness can be accomplished. Services performed outside the State of Texas shall be limited to offices and personnel located in the United States. Outsourcing or subcontracting outside the United States shall not be permitted unless approved in writing by the TFC.

VI. WARRANTIES AND REPRESENTATIONS BY A/E

6.1. Warranties and Representations by A/E. A/E hereby makes the following warranties, representations and certifications, all of which are true, accurate and complete at the time of the Effective Date and throughout the term of the Agreement, and which shall be true, accurate and complete with respect to each Deliverable. All representations and warranties discussed below shall survive the expiration or termination of this Agreement.

6.1.1. Compliance with All Laws. A/E shall procure and maintain for the duration of this Agreement any state, county, city, or federal license, authorization, insurance, waiver, permit, qualification or certification required by statute, ordinance, law, or regulation to be held by A/E to provide the goods or services required by this Agreement. A/E will be responsible to pay all taxes, assessments, fees, premiums, permits, and licenses required by law. A/E agrees to

DocuSign Envelope ID: 4D7A9C98-4F30-4D1D-907E-9A92F807637B

be responsible for payment of any such government obligations not paid by its Subcontractors during performance of this Agreement. As part of its delivery of the Professional Services, A/E shall make itself familiar with and at all times shall observe and comply with all Laws and Regulations of all Governmental Authorities that in any manner affect performance under this Agreement.

6.1.2. Immigration Reform. The Immigration Reform and Control Act of 1986 and 1990 requires that all employees hired since 1986 provide proof of identity and employment eligibility before they can work in the United States. TFC is committed to complying with all applicable immigration laws of the United States and requires compliance by all contractors and subcontractors who contract with the State. A/E shall not place any employee of A/E at a worksite, nor shall A/E permit any employee, nor any Subcontractor, to perform any Professional Services on behalf of or for the benefit of the State, without first confirming said employee's authorization to lawfully work in the United States.

6.1.2.1. A/E warrants that A/E: (i) maintains and follows an established policy to verify the employment authorization of its employees and to ensure continued compliance for the duration of employment; (ii) has verified the identity and employment eligibility of all employees in compliance with applicable law; (iii) has established internal safeguards and reporting policies to encourage its employees to report any suspected violations of immigration policies or of immigration law promptly to A/E's senior management; and (iv) is without knowledge of any fact that would render any employee or Subcontractor ineligible to legally work in the United States.

6.1.2.2. A/E further acknowledges, agrees, and warrants that A/E: (i) has complied, and shall at all times during the term of the Agreement comply, in all respects with the Immigration Reform and Control Act of 1986 and 1990, the Illegal Immigration Reform and Immigrant Responsibility Act of 1996, as amended, and all of the laws, rules, and regulations relating thereto; (ii) has properly maintained, and shall at all times during the term of the Agreement properly maintain, all records required by the Department of Homeland Security, Immigration and Customs Enforcement, including, without limitation, the completion and maintenance of the Form I-9 for each of A/E's employees; and (iii) has responded, and shall at all times during the term of the Agreement respond, in a timely fashion to any inspection requests related to such I-9 Forms. During the term of the Agreement, A/E shall, and shall cause its directors, officers, managers, agents and employees to, fully cooperate in all respects with any audit, inquiry, inspection or investigation that may be conducted by TFC or any state agency of A/E or any of its employees.

6.1.2.3. A/E acknowledges, agrees, and warrants that all Subcontractors permitted by it to perform Professional Services will be required to agree to these same terms as a condition to being awarded any Subcontract for such work.

6.1.3. Proficiency in Systems. A/E is proficient in the use of CAD systems and the EPMCS utilized by TFC.

6.1.4. Warranty of Services. All Professional Services provided by A/E pursuant to this Agreement will be performed in a manner consistent with that degree of care and skill

DocuSign Envelope ID: 4D7A9C98-4F30-4D1D-907E-9A92F807637B

ordinarily exercised by members of the same profession currently practicing under similar circumstances.

6.1.5. Warranty of Deliverables. All Deliverables shall be: (i) completed and delivered in a timely manner and in a manner consistent with standards in the applicable trade, profession, or industry; (ii) conform to or exceed the specifications set forth in this Agreement; and (iii) be fit for ordinary use, of good quality, and with no material defects.

6.1.6. Additional Warranties. In performing its Professional Services for the Project, A/E shall be bound by, and comply with, A/E's Proposal dated December 16, 2019, attached hereto and incorporated herein by reference for all purposes as Exhibit G, to the extent any warranties, representations, and/or promises of additional services are made therein, and only to that extent.

6.1.7. Eligibility. A/E certifies that the individual or business entity named in this Agreement is not ineligible to receive the specified Agreement and acknowledges that this Agreement may be terminated and payment withheld if this certification is inaccurate pursuant to Texas Government Code, Section 2155.004(b).

6.1.8. Family Code Disclosure of Ownership. Pursuant to the requirements of the Texas Family Code, Section 231.006, regarding delinquent child support, the individual or business entity named in this Agreement is not ineligible to receive payment under this Agreement and, if applicable, A/E has provided, prior to its execution of this Agreement, the name and social security number of each such person (sole proprietors, firm owners, partners, or shareholders) holding at least twenty-five percent (25%) ownership of the business entity entering into this Agreement. A/E acknowledges that this Agreement may be terminated and payment may be withheld if this certification is inaccurate.

6.1.9. Deceptive Trade Practices Act: Unfair Business Practices Disclosures. A/E has not been found liable of Deceptive Trade Practices Act violations under Chapter 17 of the Texas Business and Commerce Code or of any unfair business practice in any administrative hearing or court suit. A/E further certifies that it has no officers who have served as officers of other entities who have been found liable of Deceptive Trade Practices violations or of any unfair business practices in an administrative hearing or court suit. In the event that allegations of Deceptive Trade Practices violations under Chapter 17 of the Texas Business and Commerce Code or of any unfair business practices against either A/E or any of A/E's officers have occurred or are currently pending in an administrative proceeding or in a lawsuit filed with any court, then A/E has disclosed all such matters to TFC and provided a brief description of each allegation, information regarding the administrative body or court before which the matter is pending, and the current status of the matter.

6.1.10. Disclosure of Former State Executives. Pursuant to Texas Government Code, Section 669.003 relating to contracting with an executive of a state agency, no Person who, in the past four (4) years served as an executive of TFC or any other state agency was involved with or has any interest in this Agreement or any Contract resulting from this Agreement. If A/E employs or has used the services of a former executive head of TFC or any other state agency, then A/E has provided the name of the former executive, the name of the state agency, the date

DocuSign Envelope ID: 4D7A9C98-4F30-4D1D-907E-9A92F807637B

of separation from the state agency, the position held with A/E, and the date of employment with A/E.

6.1.11. Certification Concerning Restricted Employment for Former State Officers or Employees Under Government Code § 572.069. A/E certifies that it has not employed and will not employ a former TFC or state officer who participated in a procurement or contract negotiation for TFC involving A/E within two (2) years after the state officer or employee left state agency employment or service. This certification only applies to former state officers or employees whose service or employment ceased on or after September 1, 2015.

6.1.12. No Conflicts. A/E represents and warrants that A/E has no actual or potential conflicts of interest in providing services to the State of Texas under this A/E and that A/E's provision of services under this Agreement would not reasonably create an appearance of impropriety.

6.1.13. Financial Interest/Gifts. Pursuant to Texas Government Code Sections 572.051 and 2255.001 and Texas Penal Code Section 36.09, A/E has not given, offered to give, nor intends to give at any time hereafter, any economic opportunity, future employment, gift, loan, gratuity, special discount, trip, favor, or service to a public servant in connection with this Agreement. Pursuant to Texas Government Code Chapter 573 and Section 2254.032, if applicable, A/E certifies that A/E knows of no officer or employee of TFC, nor any relative within the second degree of consanguinity or affinity of an officer or employee of TFC, that has a financial interest in A/E's company or corporation. A/E further certifies that no partner, corporation, or unincorporated association which employs, retains or contracts with, or which may employ, retain, or contract with any of the above, has a financial interest in any entity with which A/E will be dealing on behalf of TFC.

6.1.14. Prior Employment. A/E knows of no officer or employee of TFC, nor any relative within the second degree of consanguinity or affinity of an officer or employee of TFC, that has a financial interest in A/E's firm or corporation. A/E further certifies that no partner, corporation, or unincorporated association that employs, retains or contracts with, or which may employ, retain, or contract with any of the above, has a financial interest in any entity with which A/E will be dealing on behalf of TFC pursuant to the Texas Government Code, Chapter 573 and Section 2254.032. Furthermore, A/E certifies and agrees that if it employs any former employee of TFC, such employee will perform no work in connection with this Agreement during the twelve (12) month period immediately following the employee's last date of employment at TFC.

6.1.15. Affirmation as to Submittals. Upon submittal to TFC of any documentation or data that was created or modified by A/E, including but not limited to Drawings, Specifications, and the Budget, all representations contained therein shall be true and accurate as to each such creation or modification.

6.1.16. Disaster Relief Contract Violation. Under Sections 2155.006 and 2261.053 of the Texas Government Code, A/E certifies that the individual or business entity named in the response or Agreement is not ineligible to receive the specified Agreement and acknowledges that this Agreement may be terminated and payment withheld if this certification is inaccurate.

DocuSign Envelope ID: 4D7A9C98-4F30-4D1D-907E-9A92F807637B

6.1.17. Excluded Parties. A/E certifies that it is not listed on the federal government's terrorism watch list as described in Executive Order 13224.

6.1.18. Suspension and Debarment. A/E certifies that it and its principals are not suspended or debarred from doing business with the state or federal government as listed on the State of Texas Debarred Vendor List maintained by the Texas Comptroller of Public Accounts and the System for Award Management (SAM) maintained by the General Services Administration.

6.1.19. Entities that Boycott Israel. Pursuant to Section 2270.002 of the Texas Government Code, Respondent certifies that either (i) it meets an exemption criteria under Section 2270.002; or (ii) it does not boycott Israel and will not boycott Israel during the term of the agreement resulting from this solicitation. Respondent shall state any facts that make it exempt from the boycott certification in its Response.

6.1.20. Prohibition Against Contracting with Companies Engaged in Business with Iran, Sudan, or Foreign Terrorist Organizations. In accordance with Section 2251.152 of the Texas Government Code, TFC is prohibited from entering into a governmental contract (as defined in Texas Government Code Section 2252.151(3)) with a company that is identified on a list prepared and maintained under Texas Government Code Section 806.051, 807.051, or 2252.153. If contractor is on the above-referenced list the Agreement will be considered void or voidable and TFC will not be responsible to pay Contractor for any work performed.

6.1.21. Human Trafficking Prohibition. Pursuant to Section 2155.0061 of the Texas Government Code, A/E certifies that it is not ineligible to receive this agreement and acknowledges that this Agreement may be terminated and payment withheld if A/E certification in this matter is inaccurate. TFC may not award a contract, including a contract for which purchasing authority is delegated to a state agency, that includes proposed financial participation by a person who, during the five-year (5) period preceding the date of the award, has been convicted of any offense related to the direct support or promotion of human trafficking.

6.1.22. Use of State Property. A/E is prohibited from using State Property for any purpose other than performing services authorized under the Agreement. State Property includes, but is not limited to: TFC's office space, identification badges, TFC information technology equipment and networks (e.g., laptops, portable printers, cell phones, iPads, external hard drives, data storage devices, any TFC issued software, and the TFC Virtual Private Network (VPN client)), and any other resources of TFC. A/E shall not remove State Property from the continental United States. In addition, A/E may not use any computing device to access TFC's network or e-mail while outside of the continental United States. A/E shall not perform any maintenance services on State Property unless the agreement expressly authorizes such services. During the time that State Property is in the possession of A/E, A/E shall be responsible for (i) all repair and replacement charges incurred by TFC that are associated with loss of State Property or damage beyond normal wear and tear; and (ii) all charges attributable to A/E's use of State Property that exceeds the scope of the Agreement. A/E shall fully reimburse such charges to TFC within ten (10) calendar days of A/E's receipt of TFC's notice of amount due. Use of State Property for a purpose not authorized by agreement shall constitute breach of contract and

DocuSign Envelope ID: 4D7A9C98-4F30-4D1D-907E-9A92F807637B

may result in termination of the agreement and the pursuit of other remedies available to TFC under contract, at law, or in equity.

VII. STATE FUNDING

7.1. State Funding. This Agreement shall not be construed as creating any debt on behalf of the State of Texas and/or TFC in violation of TEX. CONST. art. III, § 49. In compliance with TEX. CONST. art. VIII, § 6, it is understood that all obligations of TFC hereunder are subject to the availability of state funds. If such funds are not appropriated or become unavailable, this Agreement may be terminated. In that event, the parties shall be discharged from further obligations, subject to the equitable settlement of their respective interests accrued up to the date of termination. Furthermore, any damages due under this Agreement should not exceed the amount of funds appropriated for payment under this Agreement, but not yet paid to A/E, for the fiscal year Budget in existence at the time of the breach.

VIII. COPYRIGHTS AND TRADEMARKS

8.1. Copyrights. A/E agrees that all Deliverables provided pursuant to this Agreement are subject to the rights of TFC in effect on the date of execution of this Agreement. These rights include the right to use, duplicate and disclose such subject matter and data, in whole or in part, in any manner for alterations, additions, remodels or maintenance; and to have others do so including production of Deliverables in response to a public information request pursuant to Texas Government Code, Chapter 552. If the Deliverables produced by A/E are subject to copyright protection, A/E hereby grants to TFC a royalty-free, nonexclusive, and irrevocable license to reproduce, publish, and use such and to authorize others to do so. A/E shall include appropriate provisions to achieve the purpose of this condition in all Subcontracts entered into that produce information subject to copyright protection.

8.1.1. Disclaimers. All such Deliverables furnished by A/E pursuant to this Agreement shall be considered instruments of its services in respect to the Project. It is understood that A/E does not represent such Deliverables to be suitable for reuse on any other study or for any other purpose(s). If A/E, at TFC's request and authorization, verifies or adapts A/E's Deliverables for TFC's use on another study, A/E shall be compensated for redesign or new design, bidding, and construction administration services.

8.1.2. Delivery to TFC. A/E shall promptly provide copies of the Deliverables to TFC upon completion, termination, or cancellation of this Agreement for any reason, including all copies of the Deliverables in any form or medium specified by TFC in this Agreement, whether written, digital, or electronic.

8.1.3. TFC Right to Use. Any provision herein to the contrary notwithstanding, TFC shall be authorized to make subsequent use of the Deliverables for any and all future renovations, modifications, alterations, maintenance, repairs, and the like of the Project.

8.2. No Use of Name or Trademark. A/E agrees not to make any written use of or reference to TFC's name or registered or unregistered trademarks for any marketing, public relations, advertising, display or other business purpose or make any use of TFC's facilities for any activity

DocuSign Envelope ID: 4D7A9C98-4F30-4D1D-907E-9A92F807637B

related to the express business purposes and interests of TFC pursuant to this Agreement, without the prior written consent of TFC, which consent may be withheld or granted in TFC's sole discretion.

IX. RECORDS, AUDIT, PROPRIETARY INFORMATION, AND PUBLIC DISCLOSURE

9.1. Books and Records. A/E shall keep and maintain under generally accepted accounting principles full, true and complete records, as are necessary to fully disclose to TFC or the United States Government, or their authorized representatives, upon audits or reviews, sufficient information to determine compliance with the terms and conditions of this Agreement and all state and federal regulations and statutes.

9.2. Inspections and Audits. A/E agrees that all relevant records related to this Agreement or any work product under this Agreement, including practices of its Subcontractors, shall be subject, at any reasonable time, to inspection, examination, review, audit, and copying at any office or location of A/E where such records may be found, with or without notice by the Texas State Auditor's Office ("SAO"), the contracting agency or its contracted examiners, or the Office of the Texas Attorney General, and with regard to any federal funding, the relevant federal agency, the Comptroller General, the General Accounting Office, the Office of the Inspector General, or any of their authorized representatives. All Subcontracts shall reflect the requirements of this section. In addition, pursuant to Texas Government Code, Section 2262.003, the SAO may conduct an audit or investigation of any entity receiving funds under this Agreement, including direct payments to A/E and indirect payments under a Subcontract to this Agreement; acceptance of such monies acts as acceptance of SAO authority, under legislative audit committee direction, to audit and investigate related to those funds and the entity subject to the audit or investigation must provide SAO with access to any information SAO considers relevant to the scope of the audit or investigation.

9.3. Records Retention. All records relevant to this Agreement shall be retained for a minimum of seven (7) years. This retention period runs from the date of payment for the relevant goods or services by TFC, or from the date of termination of the Agreement, whichever is later. Retention time shall be extended when an audit is scheduled or in progress for a period reasonably necessary to complete an audit and/or to complete any administrative proceeding or litigation which may ensue.

9.4. Confidentiality Provisions Applicable to A/E.

9.4.1. Protection of Confidential Information. A/E hereby acknowledges, understands and agrees (i) that in the course of conducting its due diligence regarding the provision of Professional Services to TFC, certain Confidential Information, as defined below, will be disclosed to A/E; and (ii) that whether developed by TFC or others employed by or associated with TFC, all Confidential Information is, and shall remain, the exclusive and confidential property of TFC, and shall be at all times regarded, treated and protected as such by A/E in accordance with this Agreement. Failure to mark any information "Confidential" shall not affect the confidential nature of such information.

DocuSign Envelope ID: 4D7A9C98-4F30-4D1D-907E-9A92F807637B

9.4.2. Definition of Confidential Information. "Confidential Information" shall mean all information, whether or not originated by TFC, which is used in, or a part of, TFC's business and operations and is (i) proprietary to, about, or created by TFC; (ii) gives TFC some competitive advantage or the opportunity of obtaining such advantage or the disclosure of which could be detrimental to the interests of TFC; (iii) designated as "Confidential Information" by TFC, or from all the relevant circumstances should reasonably be assumed by A/E to be confidential and proprietary to TFC; or (iv) not generally known by A/E. Such Confidential Information includes, but is not limited to, the following types of information and other information of a similar nature (whether or not reduced to writing or designated as confidential).

9.4.2.1. Work product resulting from, or related to, work, projects, or services performed or to be performed by TFC for A/E and/or for actual and potential Using Agencies that are related to the business and/or operations of TFC, including but not limited to, methods, processes, procedures, analysis, techniques, and audits used in connection therewith.

9.4.2.2. Computer software of any type or form in any stage of actual or anticipated research and development, including, but not limited to, programs and program modules, routines and subroutines, processes, algorithms, design concepts, design specifications (design notes, annotations, documentation, flowcharts, coding sheets, and the like), source code, object code and load modules, programming, program patches, and system designs.

9.4.2.3. Information relating to TFC's proprietary rights prior to any public disclosure thereof, including but not limited to, the nature of the proprietary rights, production data, technical and engineering data, test data and test results, the status and details of research and development of products and services, and information regarding acquiring, protecting, enforcing and licensing proprietary rights (including patents, copyrights and trade secrets).

9.4.2.4. Internal personnel and financial information, vendor names and other vendor information (including vendor characteristics, services, and agreements), customer lists and contacts, business plan(s), purchasing and internal cost information, internal services and operational manuals, pricing, marketing, and all other manner and methods of conducting TFC's business.

9.4.2.5. Marketing and development plans, price and cost data, price and fee amounts, pricing and billing policies, quoting procedures, marketing techniques and methods of obtaining business, forecasts and forecast assumptions and volumes, and future plans and potential strategies of TFC which have been or are being discussed.

9.4.2.6. Any information obtained from TFC regarding its pursuit or negotiation of agreements with any potential "Contracting Person" regarding a potential "Qualifying Project" as those terms are defined in Texas Government Code, Section 2267.001, as the same may be amended from time to time, including, but not necessarily limited to, the names of the Contracting Person, including their representatives, (collectively, "Business Customers"); the parties to and substance of any agreements between TFC and said Business Customers; services and data provided, or to be provided, by or to said Business Customers; and the type, quantity and specifications of products and services purchased, leased, licensed or received, or to be purchased, leased, licensed or received, by Business Customers.

DocuSign Envelope ID: 4D7A9C98-4F30-4D1D-907E-9A92F807637B

9.4.2.7. "Confidential Information" shall not include information that: (i) is or becomes available to the public generally, other than as a result of disclosure by A/E in breach of the terms of this Agreement; (ii) becomes available to A/E from a source (other than TFC) which source is not, to the best of A/E's knowledge, subject to any legally binding obligation to keep the same confidential; or (iii) has been independently acquired or developed by A/E.

9.4.3. Covenants. As a consequence of A/E's acquisition or anticipated acquisition of Confidential Information, A/E will occupy a position of trust and confidence to TFC with respect to TFC's affairs and business. In view of the foregoing and of the mutual consideration to be provided to each party, A/E agrees that it is reasonable and necessary that it make the following covenants.

9.4.3.1. Both during and forever after the performance of its due diligence investigation, A/E will not disclose Confidential Information to any Person or entity other than as necessary in carrying out its duties on behalf of TFC and/or due diligence investigation, without first obtaining TFC's prior, written consent, and A/E will take all reasonable precautions to prevent inadvertent disclosure of such Confidential Information. This prohibition against A/E's disclosure of Confidential Information includes, but is not limited to, disclosing the fact that any similarity exists between the Confidential Information and information independently developed by another Person or entity, and A/E understands that such similarity does not excuse A/E from abiding by its covenant or other obligations pursuant to this Agreement.

9.4.3.2. Both during and after the conduct of its due diligence investigation, A/E will not use, copy, or transfer Confidential Information other than as necessary in carrying out its duties on behalf of TFC and/or due diligence investigation, without first obtaining prior written consent of TFC, and will take all reasonable precautions to prevent inadvertent use, copying, or transfer of such Confidential Information. This prohibition against A/E's use, copying, or transfer of Confidential Information includes, but is not limited to, selling, licensing or otherwise exploiting, directly or indirectly, any products or services (including software in any form) that embody or are derived from Confidential Information.

9.4.3.3. A/E agrees not to make any written use of or reference to TFC's name or registered or unregistered trademarks (or any names under which TFC conducts business or operations) for any marketing, public relations, advertising, display or other business purpose or make any use of TFC's facilities for any activity related to the express business purposes and interests of TFC pursuant to this Agreement, without the prior written consent of TFC, which consent may be withheld or granted in TFC's sole and absolute discretion.

9.4.3.4. A/E agrees not to utilize, either directly or indirectly, any Confidential Information in order to facilitate or create direct business relationships with Business Customers of TFC.

9.4.4. Open Records Request or Similar Requests for Information. In the event that A/E receives a request to disclose all or any part of the Confidential Information under the terms of the Texas Public Information Act, a subpoena or other order issued by a court of competent jurisdiction or by another governmental agency, A/E shall: (i) notify TFC of the existence, terms, and circumstances surrounding such a request within one (1) business day of the receipt of the

DocuSign Envelope ID: 4D7A9C98-4F30-4D1D-907E-9A92F807637B

request; (ii) notify the entity requesting the information that such a request for information should be submitted to TFC, not A/E; (iii) provide the entity requesting the information the contact information of TFC's public information coordinator; and (iv) forward all responsive information to TFC within two (2) business days of the receipt of the request.

9.5. Confidentiality Provisions Applicable to TFC. Subject to the provisions of Section 9.6 below, TFC shall keep confidential all information, in whatever form, produced, prepared, or observed by A/E to the extent that such information is: (i) confidential by law; (ii) marked or designated "confidential," or words to that effect, in a font size no smaller than 14 point, by A/E; or (iii) information that TFC is otherwise required to keep confidential by this Agreement.

9.6. Public Records. Notwithstanding any provisions of this Agreement to the contrary, A/E understands that TFC will comply with the Texas Public Information Act, Texas Government Code, Chapter 552. If contacted by TFC, A/E will cooperate with TFC in the production of documents responsive to the request. A/E agrees to provide the documents responsive to the request in the format and within the time frame specified by TFC. A/E may request that TFC seek an opinion from the Office of the Texas Attorney General. However, the final decision whether to seek a ruling from the Office of the Texas Attorney General will be made by TFC in its sole discretion to comply with the legal requirements of the Texas Public Information Act. Additionally, A/E will notify TFC's general counsel within twenty-four (24) hours of receipt of any third-party requests for information written, produced, collected, assembled, or maintained in connection with this Agreement and/or any amendment to this Agreement. This Agreement and/or any amendment to this Agreement and all data and other information generated or otherwise obtained in its performance is subject to the Texas Public Information Act. A/E agrees to maintain the confidentiality of information received from the State of Texas during the performance of this Agreement, including information which discloses confidential personal information particularly, but not limited to, social security numbers. Furthermore, A/E is required to make any information created or exchanged with the State pursuant to this Agreement, and not otherwise excepted from disclosure under the Texas Public Information Act, available in a format that is accessible by the public as specified by TFC at no additional charge to the State.

X. INSURANCE

10.1. Insurance Requirements. All persons who enter into an agreement to provide professional services (hereinafter referred to as "Agreement"), including, but not limited to, professional engineering services and/or professional architectural services, as defined in Texas Government Code, Chapter 2254, Subchapter A (hereinafter collectively referred to as "A/E") with the State of Texas, by and through the Texas Facilities Commission (hereinafter referred to as "TFC"), must comply with the insurance requirements established by the particular program area of TFC before the A/E is authorized to commence providing those professional services.

10.2. Required Insurance Coverages. The required insurance coverages for this particular project are as follows.

10.2.1. Workers' Compensation and Employers' Liability Insurance. By execution of an Agreement, A/E thereby certifies, pursuant to Texas Labor Code Section 406.096(a), that A/E

DocuSign Envelope ID: 4D7A9C98-4F30-4D1D-907E-9A92F807637B

provides workers' compensation and employers' liability insurance for all employees employed on this public project with limits of not less than: (i) $1,000,000 each accident; (ii) $1,000,000 disease each employee; and (iii) $1,000,000 disease policy limit.

10.2.1.1. Pursuant to Texas Labor Code Section 406.096(b), A/E shall require each Subcontractor to certify in writing to the A/E that said Subcontractor provides workers' compensation and employers' liability insurance for all of Subcontractor's employees employed on this public project. In keeping with Sections 5.2.8 and 5.2.9 of Exhibit A, the 2015 Uniform General Conditions, Owner is entitled, upon request and without expense, to receive copies of Subcontractor's written certifications.

10.2.1.2. The policy must include an Other States Endorsement to include the State of Texas if A/E's business is domiciled outside the State of Texas.

10.2.1.3. The policy shall be endorsed to include Waiver of Subrogation in favor of TFC.

10.2.2. Commercial General Liability. Commercial general liability insurance coverage including premises; operations; blanket contractual liability coverage assumed under the Agreement and all contracts relative to the Project, including independent contractor's liability pursuant to unamended ISO, or its equivalent; products and completed operations; and extended to include explosion, collapse, and underground hazards, with a combined single limit of $1,000,000 per occurrence for coverages A and B; and a general aggregate of $2,000,000.

10.2.2.1. The policy shall include endorsement CG2503, Amendment of Aggregate Limits of Insurance (per Project), or its equivalent.

10.2.2.2. The policy shall be endorsed to include Additional Insured status in favor of TFC.

10.2.2.3. The policy shall be endorsed to include Waiver of Subrogation in favor of TFC.

10.2.2.4. The policy shall be endorsed to include thirty (30) Day Notice of Cancellation, ten (10) Days for Non-Payment of Premium, in favor of TFC.

10.2.3. Business Automobile Liability Insurance. Business automobile liability coverage for all owned, non-owned, and hired vehicles with a minimum combined single limit of $1,000,000 per accident for bodily injury and property damage. Alternate acceptable limits are $1,000,000 bodily injury per person, $1,000,000 bodily injury per accident, and at least $1,000,000 property damage liability per accident.

10.2.3.1. No aggregate shall be permitted.

10.2.3.2. Such insurance must include coverage for loading and unloading hazards.

10.2.3.3. The policy shall be endorsed to include Additional Insured status in favor of TFC.

DocuSign Envelope ID: 4D7A9C98-4F30-4D1D-907E-9A92F807637B

10.2.3.4. The policy shall be endorsed to include Waiver of Subrogation in favor of TFC.

10.2.3.5. The policy shall be endorsed to include thirty (30) Day Notice of Cancellation, ten (10) Days for Non-Payment of Premium, in favor of TFC.

10.2.4. Architect/Engineers Professional Liability Insurance.

10.2.4.1. Architect/Engineers professional liability/errors and omissions coverage with a minimum limit of $1,000,000 per claim and in the aggregate to pay on behalf of the insured all sums which the insured shall become legally obligated to pay as damages by reason of any negligent act, error, or omission committed with respect to plans, maps, drawings, analysis, reports, surveys, change orders, designs, or specifications prepared by the insured.

10.2.4.2. A/E shall maintain this coverage for the duration of this Agreement or for not less than twenty-four (24) months following completion of the Project, whichever is longer.

10.2.4.3. The policy shall be endorsed to include thirty (30) Day Notice of Cancellation, ten (10) Days for Non-Payment of Premium, in favor of TFC.

10.2.5. Umbrella Liability Insurance. Umbrella liability insurance for a period not to expire or terminate prior to the expiration of all warranty periods, insuring Architect/Engineer for an amount of not less than $1,000,000, which provides coverage at least as broad as, and applies in excess and follows form of, the primary liability coverages required hereinabove. The policy shall provide coverage where underlying primary insurance coverage limits are exhausted or otherwise unavailable or inadequate to cover a loss.

10.3. General Requirements for All Insurance. The following provisions shall apply to all insurance requirements.

10.3.1. Deductibles and Self-Insured Retentions. A/E shall be responsible for all deductibles and self-insured retentions, if any, stated in the policies. All deductibles and self-insured retentions shall be disclosed on the certificates of insurance.

10.3.2. Claims–Made Policies. If coverage is underwritten on a claims-made basis, the retroactive date for the policy and all renewals shall be coincident with the date of the Agreement and the certificate of insurance shall state that the coverage is claims-made and the retroactive date. Any premiums for this extended reporting period shall be paid by A/E.

10.3.3. Additional Policy Requirements. In the event the primary insurance policy does not so provide, A/E shall obtain and maintain endorsements for each deficient policy, or provide such other document(s) as may be approved in advance by TFC, that satisfy all of the following requirements.

10.3.3.1. Naming "Texas Facilities Commission, P.O. Box 13047, Austin, Texas 78711, its officials, directors, employees, representatives, and volunteers" as additional insureds, provided however, this requirement does not apply to professional liability insurance or workers' compensation insurance.

DocuSign Envelope ID: 4D7A9C98-4F30-4D1D-907E-9A92F807637B

10.3.3.2. The policy, or such other document(s) as may be acceptable to TFC, must obligate the insurer, or a third-party acceptable to TFC, to notify the Texas Facilities Commission, Attention: Insurance Specialist, P.O. Box 13047, Austin, Texas 78711, of any (i) non-renewal; (ii) cancellation; or (iii) material changes, in writing, as soon as is reasonably possible prior to any such non-renewal, cancellation or change.

10.3.3.3. "Material Change" means any of the following changes to the Policy during the term of the Policy: (i) a change in the Policy period; (ii) a material revision to, or removal of, a coverage section; (iii) a reduction of the amount of limits of insurance, provided such reduction is not the result of payment of damages, medical expenses, or claim expenses; or (iv) an increase of the amount of any self-insured retention(s).

10.3.3.4. As to those policies wherein TFC is an additional insured, said insurance coverages must be primary and non-contributing with respect to insurance or self-insurance carried by TFC, if any.

10.3.4. No Commencement of Work. A/E shall not, nor allow any Subcontractor(s) to, commence the performance of Professional Services under this Agreement until the proof of satisfaction of the insurance requirements has been received and approved by TFC. However, any approval of the proof of satisfaction of the insurance requirements by TFC shall not relieve or decrease the liability of A/E hereunder.

10.3.5. Qualifications of Insurer. Insurance shall be written by a company licensed to do business in the State of Texas at the time the policy is issued and renewed, and shall be written by a company with an A.M. Best rating of A- or better.

10.3.6. No Cancellation or Lapse. A/E shall not cause or permit any required insurance to cancel or lapse prior to the expiration of all warranty periods, provided however, policy duration for architect/engineers professional liability/errors & omissions coverage is not governed by this provision. A/E must update all expired policies prior to submission of any Application for Payment.

10.3.7. Notice of Erosion. A/E shall provide TFC with thirty (30) days written notice of erosion of any aggregate limits below the minimum amounts required by the Agreement.

10.3.8. Right to Review. TFC reserves the right to review the insurance requirements and to require deletion, revision, and/or modification of particular policy terms, conditions, limitations, or exclusions (except where policy provisions are established by law or regulations that are binding upon TFC, A/E, or the underwriter) on any such policies when deemed necessary and prudent by TFC based upon changes in statutory law, court decisions, or the claims history of the industry and/or of A/E, provided however, such modifications must be commercially available to A/E. TFC shall make an equitable adjustment to the Contract Sum for any additional cost resulting therefrom.

10.3.9. Losses Paid by A/E. Actual losses not covered by the required insurance shall be paid by A/E.

DocuSign Envelope ID: 4D7A9C98-4F30-4D1D-907E-9A92F807637B

10.3.10. Failure to Obtain, Maintain or Renew. Failure to timely obtain, maintain and/or renew the insurance policies as required may, at the sole discretion of TFC, subject A/E to, among all other available remedies, at law and in equity, the following.

10.3.10.1. Disqualification from eligibility to participate in any other or future projects with TFC.

10.3.10.2. Suspension of Work for cause.

10.3.10.3. In the event A/E fails to timely renew or pay any of the renewal premiums for any expiring policies, TFC shall have the right (but not the obligation) to: (i) make such payments; and/or (ii) acquire replacement coverage, and thereafter set off the amount(s) or costs thereof against the next payment(s) coming due to A/E under the Agreement or under any other agreement between TFC and A/E.

10.3.10.4. TFC may withhold any payments due to A/E from this Project or any other TFC project until satisfaction is achieved.

10.3.11. TFC a Third-Party Beneficiary. TFC shall be a third-party beneficiary of any agreement(s) between A/E and any and all Persons who procure, or cause to be procured, the above-described insurance coverages, and all renewals thereof, for the Project.

10.3.12. Required Insurance Coverages No Effect On Indemnifications. The insurance and insurance limits required herein shall not be deemed as a limitation on A/E's liability under the indemnifications granted to TFC.

10.3.13. No Warranty That Insurance Limits Will Be Adequate to Fully Protect A/E. The insurance requirements set out herein shall not be interpreted as any representation or warranty that the insurance coverage and limits will necessarily be adequate to fully protect A/E.

XI. MISCELLANEOUS PROVISIONS

11.1 Indemnification.

11.1.1. **ACTS OR OMISSIONS. A/E SHALL INDEMNIFY AND HOLD HARMLESS TFC, THE STATE OF TEXAS AND CUSTOMERS, AND/OR THEIR OFFICERS, AGENTS, EMPLOYEES, REPRESENTATIVES, CONTRACTORS, ASSIGNEES, AND/OR DESIGNEES FROM ANY AND ALL LIABILITY, ACTIONS, CLAIMS, DEMANDS, OR SUITS, AND ALL RELATED COSTS, ATTORNEY FEES, AND EXPENSES ARISING OUT OF, OR RESULTING FROM ANY ACTS OR OMISSIONS OF A/E OR ITS AGENTS, EMPLOYEES, SUBCONTRACTORS, ORDER FULFILLERS, OR SUPPLIERS OF SUBCONTRACTORS IN THE EXECUTION OR PERFORMANCE OF THE AGREEMENT AND ANY PURCHASE ORDERS ISSUED UNDER THE AGREEMENT. THE DEFENSE SHALL BE COORDINATED BY A/E WITH THE OFFICE OF THE ATTORNEY GENERAL WHEN TEXAS STATE AGENCIES ARE NAMED DEFENDANTS IN ANY LAWSUIT AND A/E MAY NOT AGREE TO ANY SETTLEMENT WITHOUT FIRST OBTAINING THE**

DocuSign Envelope ID: 4D7A9C98-4F30-4D1D-907E-9A92F807637B

CONCURRENCE FROM THE OFFICE OF THE ATTORNEY GENERAL. A/E AND TFC AGREE TO FURNISH TIMELY WRITTEN NOTICE TO EACH OTHER OF ANY SUCH CLAIM.

11.1.2. **INFRINGEMENTS. A/E SHALL INDEMNIFY AND HOLD HARMLESS THE STATE OF TEXAS AND TFC, AND/OR THEIR EMPLOYEES, AGENTS, REPRESENTATIVES, CONTRACTORS, ASSIGNEES, AND/OR DESIGNEES FROM ANY AND ALL THIRD PARTY CLAIMS INVOLVING INFRINGEMENT OF UNITED STATES PATENTS, COPYRIGHTS, TRADE AND SERVICE MARKS, AND ANY OTHER INTELLECTUAL OR INTANGIBLE PROPERTY RIGHTS IN CONNECTION WITH THE PERFORMANCES OR ACTIONS OF A/E PURSUANT TO THIS AGREEMENT. A/E AND TFC AGREE TO FURNISH TIMELY WRITTEN NOTICE TO EACH OTHER OF ANY SUCH CLAIM. A/E SHALL BE LIABLE TO PAY ALL COSTS OF DEFENSE INCLUDING ATTORNEYS' FEES. THE DEFENSE SHALL BE COORDINATED BY A/E WITH THE OFFICE OF THE ATTORNEY GENERAL WHEN TEXAS STATE AGENCIES ARE NAMED DEFENDANTS IN ANY LAWSUIT AND A/E MAY NOT AGREE TO ANY SETTLEMENT WITHOUT FIRST OBTAINING THE CONCURRENCE FROM THE OFFICE OF THE ATTORNEY GENERAL. A/E SHALL HAVE NO LIABILITY UNDER THIS SECTION IF THE ALLEGED INFRINGEMENT IS CAUSED IN WHOLE OR IN PART BY: (i) USE OF THE PRODUCT OR SERVICE FOR A PURPOSE OR IN A MANNER FOR WHICH THE PRODUCT OR SERVICE WAS NOT DESIGNED, (ii) ANY MODIFICATION MADE TO THE PRODUCT WITHOUT A/E'S WRITTEN APPROVAL, (iii) ANY MODIFICATIONS MADE TO THE PRODUCT BY THE A/E PURSUANT TO TFC'S SPECIFIC INSTRUCTIONS, (iv) ANY INTELLECTUAL PROPERTY RIGHT OWNED BY OR LICENSED TO TFC, OR (v) ANY USE OF THE PRODUCT OR SERVICE BY TFC THAT IS NOT IN CONFORMITY WITH THE TERMS OF ANY APPLICABLE LICENSE AGREEMENT. IF A/E BECOMES AWARE OF AN ACTUAL OR POTENTIAL CLAIM, OR TFC PROVIDES A/E WITH NOTICE OF AN ACTUAL OR POTENTIAL CLAIM, A/E MAY (OR IN THE CASE OF AN INJUNCTION AGAINST TFC, SHALL), AT A/E'S SOLE OPTION AND EXPENSE; (i) PROCURE FOR TFC THE RIGHT TO CONTINUE TO USE THE AFFECTED PORTION OF THE PRODUCT OR SERVICE, OR (ii) MODIFY OR REPLACE THE AFFECTED PORTION OF THE PRODUCT OR SERVICE WITH FUNCTIONALLY EQUIVALENT OR SUPERIOR PRODUCT OR SERVICE SO THAT TFC'S USE IS NON-INFRINGING.**

11.1.3. **TAXES/WORKERS' COMPENSATION/UNEMPLOYMENT INSURANCE – INCLUDING INDEMNITY. A/E AGREES AND ACKNOWLEDGES THAT DURING THE EXISTENCE OF THIS AGREEMENT, A/E SHALL BE ENTIRELY RESPONSIBLE FOR THE LIABILITY AND PAYMENT OF A/E'S AND A/E'S EMPLOYEES' TAXES OF WHATEVER KIND, ARISING OUT OF THE PERFORMANCES IN THIS AGREEMENT. A/E AGREES TO COMPLY WITH ALL STATE AND FEDERAL LAWS APPLICABLE TO ANY SUCH PERSONS, INCLUDING LAWS REGARDING WAGES, TAXES, INSURANCE, AND WORKERS' COMPENSATION. TFC AND/OR THE STATE SHALL NOT BE LIABLE TO THE A/E,**

DocuSign Envelope ID: 4D7A9C98-4F30-4D1D-907E-9A92F807637B

ITS EMPLOYEES, AGENTS, OR OTHERS FOR THE PAYMENT OF TAXES OR THE PROVISION OF UNEMPLOYMENT INSURANCE AND/OR WORKERS' COMPENSATION OR ANY BENEFIT AVAILABLE TO A STATE EMPLOYEE OR EMPLOYEE OF ANOTHER GOVERNMENTAL ENTITY CUSTOMER. A/E AGREES TO INDEMNIFY AND HOLD HARMLESS TFC, THE STATE OF TEXAS AND/OR THEIR EMPLOYEES, AGENTS, REPRESENTATIVES, CONTRACTORS, AND/OR ASSIGNEES FROM ANY AND ALL LIABILITY, ACTIONS, CLAIMS, DEMANDS, OR SUITS, AND ALL RELATED COSTS, ATTORNEYS' FEES, AND EXPENSES, RELATING TO TAX LIABILITY, UNEMPLOYMENT INSURANCE AND/OR WORKERS' COMPENSATION IN ITS PERFORMANCE UNDER THIS AGREEMENT. A/E SHALL BE LIABLE TO PAY ALL COSTS OF DEFENSE INCLUDING ATTORNEYS' FEES. THE DEFENSE SHALL BE COORDINATED BY A/E WITH THE OFFICE OF THE ATTORNEY GENERAL WHEN TEXAS STATE AGENCIES ARE NAMED DEFENDANTS IN ANY LAWSUIT AND A/E MAY NOT AGREE TO ANY SETTLEMENT WITHOUT FIRST OBTAINING THE CONCURRENCE FROM THE OFFICE OF THE ATTORNEY GENERAL. A/E AND TFC AGREE TO FURNISH TIMELY WRITTEN NOTICE TO EACH OTHER OF ANY SUCH CLAIM.

11.2. Historically Underutilized Businesses ("HUBs"). In accordance with state law, it is TFC's policy to assist HUBs, whenever possible, to participate in providing goods and services to the agency. TFC encourages those parties with whom it contracts for the provision of goods and services to adhere to this same philosophy in selecting Subcontractors to assist in fulfilling A/E's obligations with TFC. If A/E subcontracts with others for some or all of the services to be performed under this Agreement, A/E shall comply with all HUB requirements pursuant to Chapter 2161 of the Texas Government Code. A copy of the Approved HUB Subcontracting Plan ("HSP") is attached hereto and incorporated herein for all purposes as Exhibit H. When required, A/E shall submit an updated HSP. Upon TFC approval of HSP update(s), such update(s) shall become, without further notice or action, a part of the incorporated Exhibit H. A copy of the HUB Subcontracting Plan ("HSP") Form is attached hereto and incorporated herein for all purposes as Exhibit I. Prior to execution of an Amendment, an updated HSP must be approved by TFC. A/E shall provide the HUB program of TFC with pertinent details of any participation by a HUB in fulfilling the duties and obligations arising hereunder on the HSP Progress Assessment Reporting ("PAR") Form, a copy of which is attached hereto and incorporated herein for all purposes as Exhibit J.

11.3. Requirement to Utilize HUB Compliance Reporting System. Pursuant to Texas Administrative Code, Title 34 §§ 20.85(f)(1)(2) and 20.287(b), TFC administers monthly administration HSP-PAR compliance monitoring through its HUB Compliance Reporting System commonly know as B2G. A-E's and A/E's subcontractors/subconsultants shall submit required PAR information into the B2G system. Any delay in the timely submission of PAR information into the B2G system will be treated as an invoicing error subject to dispute under Tx. Gov't Code Section 2251.042.

11.4. Relationship of the Parties. A/E is associated with TFC only for the purposes and to the extent specified in this Agreement, and with respect to performance of the contracted services

DocuSign Envelope ID: 4D7A9C98-4F30-4D1D-907E-9A92F807637B

pursuant to this Agreement, A/E is and shall be an independent contractor. Subject only to the terms of this Agreement, A/E shall have the sole right to supervise, manage, operate, control, and direct performance of the details incident to its duties under this Agreement. Nothing contained in this Agreement shall be deemed or construed to create a partnership or joint venture, to create relationships of an employer-employee or principal-agent, or to otherwise create any liability for TFC whatsoever with respect to the indebtedness, liabilities, and obligations of A/E or any other party. A/E shall be solely responsible for, and TFC shall have no obligation with respect to: (i) withholding of income taxes, FICA, or any other taxes or fees; (ii) industrial or workers' compensation insurance coverage; (iii) participation in any group insurance plans available to employees of the State of Texas; (iv) participation or contributions by the State to the State Employees Retirement System; (v) accumulation of vacation leave or sick leave; or (vi) unemployment compensation coverage provided by the State.

11.5. No Assignment and Subcontracts. A/E shall neither assign, transfer, nor delegate any rights, obligations, or duties under this Agreement without the prior written consent of TFC. Notwithstanding the foregoing, it is mutually understood and agreed that A/E may engage Subcontractors to perform some or all of the Professional Services. In any approved Subcontracts, A/E shall legally bind such Subcontractor to perform and make such Subcontractor subject to all the duties, requirements, and obligations of A/E specified herein. Nothing herein shall be construed to relieve A/E of the responsibility for ensuring that the goods delivered and/or the services rendered by A/E and/or any of its Subcontractors comply with all the terms and provisions of this Agreement. A/E must provide written notification to TFC of any such Subcontractor performing work under this Agreement, including the name and taxpayer identification number of Subcontractor, the task(s) being performed, and the number of Subcontractor employees expected to work on the task.

11.6. Drug Free Work Place. A/E, A/E's employees and all Subcontractors shall comply with the applicable provisions of the Drug-Free Work Place Act of 1988 (Public Law No. 100-690, Title V, Subtitle D; 41 U.S.C. 701 et seq.) and maintain a drug-free work environment; and the final rule, government-wide requirements for drug-free work place (grants), issued by the Office of Management and Budget and the Department of Defense (32 CFR Part 280, Subpart F) to implement the provisions of the Drug-Free Work Place Act of 1988 is incorporated by reference and A/E, A/E's employees, and all Subcontractors shall comply with the relevant provisions thereof, including any amendments to the final rule that may hereafter be issued.

11.7. No Smoking. All facilities where work is to be performed are nonsmoking buildings. A/E's employees and Subcontractors are prohibited from smoking in all areas except in areas designated for smoking.

11.8. Notices. All notices, demands and requests required in this Agreement (hereinafter referred to as "Notices") must be in writing and shall be deemed to have been properly delivered and received (i) three (3) business days after deposit in a regularly maintained receptacle for the United States Postal Service, certified mail, return receipt requested with adequate postage prepaid; or (ii) one (1) business day after deposit with Federal Express or other comparable overnight delivery system for overnight delivery with all costs prepaid. All Notices hereunder shall be addressed as follows:

DocuSign Envelope ID: 4D7A9C98-4F30-4D1D-907E-9A92F807637B

If to TFC: Texas Facilities Commission
Attention: Legal Services
1711 San Jacinto Boulevard, Suite 400
Austin, Texas 78701

With a copy to: Texas Facilities Commission
Attention: John S. Raff, Deputy Executive Director
1711 San Jacinto Boulevard, Suite 400
Austin, Texas 78701

If to A/E: Tom Green and Company Engineers, Inc.
Attention: Cameron Labunski
3701 Executive Center Drive, Suite 258
Austin, Texas 78731
Phone: (512) 345-7793
E-Mail: cameronl@tgce.com

Either party hereto may change its address by giving the other party written notice thereof at least five (5) business days in advance of the effective date for such new address.

11.9. Name and Organizational Changes. Contractor must provide TFC with written notification of all name changes and organizational changes relating to Contractor including, but not limited to, merger, acquisition or sale no later than ten (10) business days of such change. Contractor, in its notice, shall describe the circumstances of the name change or organizational change, state its new name, provide the new Tax Identification Number, and describe how the change will impact its ability to perform under the Contract. If the change entails personnel changes for personnel performing the responsibilities of the Contract for Contractor, Contractor shall identify the new personnel and provide resumes to TFC, if resumes were originally required by the solicitation. TFC may request other information about the change and its impact on the Contract and Contractor shall supply the requested information within five (5) working days of receipt of the request. All written notifications of organizational change must include a detailed statement specifying the change and supporting documentation evidencing continued right of Contractor or successor entity, as applicable, to maintain its status as a party to this Contract. TFC may terminate the Contract due to any change to Contractor that materially alters Contractor's ability to perform under the Contract.

11.10. Electronic and Information Resources Accessibility Standards. (i) Effective September 1, 2006, all state agencies and institutions of higher education shall procure products which comply with the State of Texas accessibility requirements for electronic and information resources specified in Title 1 of the Texas Administrative Code, Chapter 213 when such products are available in the commercial marketplace or when such products are developed in response to a procurement solicitation. (ii) If applicable, Contractor shall provide the Texas Department of Information Resources ("DIR") with the universal resource locator ("URL") to its Voluntary Product Accessibility Template ("VPAT") for reviewing compliance with the State of Texas Accessibility requirements (based on the federal standards established under Section 508 of the

DocuSign Envelope ID: 4D7A9C98-4F30-4D1D-907E-9A92F807637B

Rehabilitation Act), or indicate that the product/service accessibility information is available from the General Services Administration "Buy Accessible Wizard" (*https://app.buyaccessible.gov/baw/Main.jsp*). Contractors not listed with the "Buy Accessible Wizard" or supplying a URL to their VPAT must provide DIR with a report that addresses the same accessibility criteria in substantively the same format. Additional information regarding the "Buy Accessible Wizard" or obtaining a copy of the VPAT is located at *http://www.section508.gov/*.

11.11. Cybersecurity Training Required. If A/E has "access," as that term is defined in 1 Tex. Admin. Code § 202.1, to any state computer system or database, then, pursuant to Tex. Gov't Code § 2054.5192, A/E and its subcontractors, officers, and employees shall complete a cybersecurity training program certified under Tex. Gov't Code §2054.519. The cybersecurity training program must be completed by the A/E and its subcontractors, officers and employees during the term and any renewal period of the Agreement. A/E shall verify completion of the training program to TFC pursuant to, and in accordance with, Tex. Gov't Code § 2054.5192.

11.12. Governing Law and Venue. This Agreement and the rights and obligations of the parties hereto shall be governed by, and construed according to, the laws of the State of Texas, exclusive of conflicts of law provisions. Venue of any suit brought pursuant to this Agreement shall be in a court of competent jurisdiction in Travis County, Texas. A/E hereby irrevocably waives any objection, including any objection to personal jurisdiction or the laying of venue or based on the grounds of forum non conveniens, which it may now or hereafter have to the bringing of, or responding to, any action or proceeding in such jurisdiction with respect to this Agreement or any document related hereto.

11.13. Proper Authority. The parties hereto represent and warrant that the Person executing this Agreement on behalf of each party has full power and authority to enter into this Agreement. A/E acknowledges that this Agreement is effective only for the period of time specified in the Agreement.

11.14. Force Majeure. Any delays in or failure of performance by either party, except in respect of the obligation for payments under this Agreement, shall not constitute default hereunder if and to the extent such delays or failure of performance are caused solely by occurrence(s) beyond the reasonable control of the party affected, and which by the exercise of due diligence such Party is unable to prevent (hereinafter referred to as "Force Majeure") including acts of God or the public enemy, sabotage, war, mobilization, revolution, civil unrest, riots, strikes, lockouts, fires, accidents breakdowns, or floods, earthquakes, hurricanes, or any other natural disaster or governmental actions. In any such event, the party claiming Force Majeure shall notify the other party of the Force Majeure event in writing within forty-eight (48) hours of the commencement of the Force Majeure event, and within forty-eight (48) hours of the termination of the Force Majeure event. In the event said party fails to timely provide either of the above-described notices, such failure shall constitute, without further notice or action, a waiver of the right to claim Force Majeure for such event. If possible, the notice shall set forth the extent and duration thereof. The party claiming Force Majeure shall exercise due diligence to prevent, eliminate or overcome such Force Majeure event where it is possible to do so and resume performance at the earliest possible date. However, if nonperformance continues for more than thirty (30) days, TFC may terminate this Agreement

DocuSign Envelope ID: 4D7A9C98-4F30-4D1D-907E-9A92F807637B

immediately upon written notification to A/E. Changes in the schedule or in the design or scope of the Project as a result of any Force Majeure which affect the cost of the A/E's services under this Agreement require a written amendment to this Agreement.

11.15. Dispute Resolution. Claims, disputes, and other matters in question arising out of or relating to this Agreement shall be subject to mediation as a condition precedent to arbitration or the institutions of legal or equitable proceedings by either party. Failure to follow the dispute resolution process below shall result in any claim filed by A/E in a court of law having jurisdiction over the claim to be summarily dismissed. Subject to Texas Government Code, Section 2260.002, the dispute resolution process provided for in Chapter 2260 of the Texas Government Code shall be used by the parties to attempt to resolve all disputes arising under this Agreement. In accordance with the Texas Civil Practice and Remedies Code, Section 114.005, the parties agree claims encompassed by Texas Government Code, Section 2260.002(3) and Texas Civil Practice and Remedies Code, Section 114.002 shall be governed by the following dispute resolution process:

11.15.1. Claims for Breach of Contract and Counterclaims.

11.15.1.1. A/E may make a claim against TFC for breach of a contract between TFC and A/E. TFC may assert a counterclaim against A/E.

11.15.1.2. A/E must provide written notice to TFC of a claim for breach of contract not later than one hundred eighty (180) days after the date of the event giving rise to the claim.

11.15.1.3. The notice must state with particularity: (i) the nature of the alleged breach; (ii) the amount A/E seeks as damages; and (iii) the legal theory of recovery.

11.15.1.4. TFC must assert, in a writing delivered to A/E, any counterclaim not later than the sixtieth (60th) day after the date of notice of a claim under this Section.

11.15.2. Damages. Damages may include the following.

11.15.2.1. The total amount of money recoverable on a claim for breach of contract under this Section may not, after deducting the amount specified in Section 11.15.2.2, below, exceed an amount equal to the sum of:

11.15.2.1.1. the balance due and owing on the contract price;

11.15.2.1.2. the amount or fair market value of orders or requests for additional work made by a unit of state government to the extent that the orders or requests for additional work were actually performed; and

11.15.2.1.3. any delay or labor-related expense incurred by the A/E as a result of an action of or a failure to act by the unit of state government or a party acting under the supervision or control of the unit of state government.

DocuSign Envelope ID: 4D7A9C98-4F30-4D1D-907E-9A92F807637B

11.15.2.2. Any amount owed the unit of state government for work not performed under a contract or in substantial compliance with its terms shall be deducted from the amount in Section 11.15.2.1 above.

11.15.2.3. Any award of damages under this Agreement may not include:

11.15.2.3.1. consequential or similar damages, except delays or labor-related expenses described by Section 11.15.2.1.3 above;

11.15.2.3.2. exemplary damages;

11.15.2.3.3. any damages based on an unjust enrichment theory;

11.15.2.3.4. attorney's fees; or

11.15.2.3.5. home office overhead.

11.15.3. Negotiation. TFC's general counsel shall examine the claim and any counterclaim and negotiate with A/E in an effort to resolve them. The negotiation must begin no later than one hundred twenty (120) days after the date the claim is received. TFC's administrative rules located at Title 1, Part 5, Section 111.31 of the Texas Administrative Code apply to this Agreement and govern the negotiation of any dispute arising from this Agreement. In the event negotiation results in the resolution of some disputed issues by agreement or in a settlement, the parties shall reduce the settlement to writing, and each party shall sign the settlement. A partial settlement or resolution of a claim does not waive a party's rights as to the parts of the claim that are not resolved.

11.15.4. Mediation. Before the one hundred twentieth (120th) day after the date the claim is filed with TFC and before the expiration of any extension of time mutually agreed upon, the parties shall agree to mediate a claim made under this Agreement. TFC's administrative rules located at Title 1, Part 5, Section 111.31 of the Texas Administrative Code apply to this Agreement and govern the mediation of any dispute arising from this Agreement.

11.15.5. Adjudication. A/E may adjudicate any claim in accordance with and to the extent permitted under the Texas Civil Practice and Remedies Code, Chapter 114 or the Texas Government Code, Chapter 2260 only after both parties have completed mediation of the claim in question.

11.15.6. Payment of Claims. In accordance with the Texas Civil Practice and Remedies Code, Section 114.011, TFC may pay a claim resolved under Section 11.14 only from money appropriated to it for payment of contract claims or for payment of the contract that is the subject of the claim. If money previously appropriated for payment of contract claims or payment of the contract is insufficient to pay the claim or settlement, the balance of the claim may be paid only from money appropriated by the legislature for payment of the claim. Chapter 304 of the Texas Finance Code applies to a judgment awarded to a claimant, except that the applicable rate of interest may not exceed the maximum rate allowed by applicable Laws and Regulations. Consistent with the Texas Civil Practice and Remedies Code, Section 114.011,

DocuSign Envelope ID: 4D7A9C98-4F30-4D1D-907E-9A92F807637B

property owned by the State or any unit of state government is not subject to seizure, attachment, garnishment, or any other creditors' remedy to satisfy a judgment on a breach of contract claim.

11.15.7. Representation of TFC. The Office of the Texas Attorney General shall defend TFC in any proceeding or adjudication conducted in conjunction with a claim brought under this Section 11.14.

11.16. Legal Construction and Severability. In the event any one or more of the provisions contained in this Agreement shall for any reason be held to be invalid, illegal, or unenforceable in any respect, such invalidity, illegality, or unenforceability shall not affect any other provision herein, and this Agreement shall be construed as if such invalid, illegal, or unenforceable provision had never been contained herein. Furthermore, in lieu of each such illegal, invalid, or unenforceable provision there shall be substituted a provision as similar in terms to such illegal, invalid, or unenforceable provision as may be possible and be legal, valid, and enforceable.

11.17. Multiple Counterparts. This Agreement may be executed in any number of counterparts, each of which shall be an original, and each such counterpart shall together constitute but one and the same agreement.

11.18. Binding Effect. This Agreement shall be binding upon and shall inure to the benefit of the parties hereto, their representatives, successors and assigns.

11.19. Limitation on Authority and No Other Obligations. A/E shall have no authority to act for or on behalf of TFC or the State of Texas except as expressly provided for in this Agreement; no other authority, power, or use is granted or implied. A/E may not incur any debts, obligations, expenses, or liabilities of any kind on behalf of TFC or the State of Texas.

11.20. Limitation on Adjudication Awards. In the event A/E brings a civil suit against TFC and prosecutes it to final judgment pursuant to Chapter 114 of the Code, any recovery by A/E shall be specifically limited to the balance due and owed by TFC on the Agreement as it may have been amended, including any amounts owed by written change orders. Pre-judgment and post-judgment interest shall be limited to the rate of three percent (3.0%) per annum. A/E HEREBY WAIVES ALL CLAIMS FOR MONETARY DAMAGES FOR ANY AMOUNT THAT MAY BE CLAIMED: (i) FOR THE INCREASED COST TO PERFORM WORK AS A DIRECT RESULT OF OWNER-CAUSED DELAYS OR ACCELERATION; (ii) BASED UPON AN UNJUST ENRICHMENT THEORY; (iii) FOR CONSEQUENTIAL AND EXEMPLARY DAMAGES; and (iv) FOR DAMAGES FOR ANY UNABSORBED HOME OFFICE OVERHEAD.

11.21. No Waiver of Sovereign Immunity. Except as may be expressly and specifically provided otherwise by Chapter 114, Texas Civil Practice and Remedies Code, nothing in this Agreement shall be construed as a waiver of sovereign immunity; nor constitute or be construed as a waiver of any of the privileges, rights, defenses, remedies, or immunities available to the State of Texas, TFC or the Using Agency. The failure to enforce, or any delay in the enforcement, of any privileges, rights, defenses, remedies, or immunities available to the State of Texas under the Agreement or under applicable law shall not constitute a waiver of such privileges, rights, defenses, remedies, or immunities or be considered as a basis for estoppel.

DocuSign Envelope ID: 4D7A9C98-4F30-4D1D-907E-9A92F807637B

11.22. No Implied Waiver. The failure of a party to insist at any time upon the strict performance of any covenant or agreement or to exercise any option, right, power, or remedy contained in this Agreement shall not be construed as a waiver or a relinquishment thereof for the future.

11.23. No Third-Party Beneficiaries. This Agreement is made solely and specifically among and for the benefit of the parties named herein and the Using Agency, and their respective successors and assigns, and no other Person shall have any right, interest, or claims hereunder or be entitled to any benefits pursuant to or on account of this Agreement as a third-party beneficiary or otherwise.

11.24. Further Assurances. A/E shall take such actions and execute such other and additional documents as are reasonably necessary or desirable in order to carry out the purposes and intent of this Agreement.

11.25. Prohibition on Certain Bids and Contracts. Under Texas Government Code, Section 2155.006, relating to the prohibition of certain bids and contracts, A/E certifies that the individual or business entity named in this Agreement is not ineligible to receive the specified Agreement and acknowledges that this Agreement may be terminated and payment withheld if this certification is inaccurate. A/E represents and warrants that during the five (5) year period preceding the date of this Agreement, A/E has not been: (i) convicted of violating a federal law in connection with a contract awarded by the federal government for relief, recovery, or reconstruction efforts as a result of Hurricane Rita, as defined by Texas Utilities Code, Section 39.459, Hurricane Katrina, or any other disaster occurring after September 24, 2005; or (ii) assessed a penalty in a federal civil or administrative enforcement action in connection with a contract awarded by the federal government for relief, recovery, or reconstruction efforts as a result of Hurricane Rita, as defined by Texas Utilities Code, Section 39.459, Hurricane Katrina, or any other disaster occurring after September 24, 2005.

11.26. No Presumptions for Ambiguities. Each party hereby represents and warrants that although the initial draft of this Agreement and any exhibits may have been prepared by one party, both parties have been given the opportunity to review this Agreement and those exhibits with counsel of their choice, and have made additions, revisions, and amendments hereto. Therefore, each party hereby covenants and agrees that they are co-drafters of this Agreement and those exhibits such that any ambiguities cannot be construed against any party.

11.27. Time is of the Essence. Time is of the essence with respect to this Agreement; provided however, in the event that any of the deadlines set forth herein end on a Saturday, Sunday, or federal legal holiday, such deadline shall automatically be extended to the next day which is not a Saturday, Sunday, or federal legal holiday.

11.28. Work Made for Hire. All Work shall constitute the exclusive property of TFC. All right, title and interest in and to said Work shall automatically and without further notice or action vest in TFC upon creation and shall be deemed to be a work for hire and made in the course of the services rendered pursuant to this Agreement. To the extent that title to any such Work may not, by operation of law, vest in TFC, or such Work may not be considered a work made for hire, all rights, title and interest therein are hereby irrevocably and unconditionally assigned to TFC.

DocuSign Envelope ID: 4D7A9C98-4F30-4D1D-907E-9A92F807637B

TFC shall also have the right to obtain and to hold in its name any and all patents, copyrights, registrations or such other protection as may be appropriate to the subject matter, and any extensions and renewals thereof. A/E must give TFC and/or the State of Texas, as well as any person designated by TFC and/or the State of Texas, all assistance reasonably necessary to effectuate the intent of this section and to perfect the rights and interests defined herein without any charge or expense to TFC beyond those amounts payable to A/E for the services rendered under this Agreement.

11.29. False Statements; Breach of Representations. By signature to this A/E, A/E makes all the representations, warranties, guarantees, certifications and affirmations included in this Agreement. If A/E signs this Agreement with a false statement or it is subsequently determined that A/E has violated any of the representations, warranties, guarantees, certifications or affirmations included in this Agreement, A/E shall be in default under this Agreement, and TFC may terminate or void this Agreement for cause and pursue other remedies available to TFC under this Agreement and applicable law.

11.30. Abandonment and Default. If A/E defaults on this Agreement, TFC reserves the right to cancel the Agreement without notice and either re-solicit or re-award the Agreement to the next best responsive and responsible respondent. The defaulting A/E will not be considered in the re-solicitation and may not be considered in future solicitations for the same type of work.

11.31. Antitrust and Assignment of Claims. A/E represents and warrants that neither A/E nor any firm, corporation, partnership, or institution represented by A/E, or anyone acting for such firm, corporation or institution has (i) violated the antitrust laws of the State of Texas under Tex. Bus. & Com. Code, Chapter 15, or the federal antitrust laws; or (ii) communicated directly or indirectly the proposal to any competitor or any other person engaged in such line of business during the procurement process for this Agreement. A/E assigns to the State of Texas all of A/E's rights, title, and interest in and to all claims and causes of action A/E may have under the antitrust laws of Texas or the United States for overcharges associated with the Agreement.

11.32. Schedule of Exhibits. The following shall be the exhibits to this Agreement and are incorporated herein by reference.

11.32.1.	Exhibit A.	2015 Uniform General Conditions.
11.32.2.	Exhibit B.	2018 Supplementary General Conditions.
11.32.3.	Exhibit C.	TFC 2018 Architectural/Engineering Guidelines, Edit Date March 19, 2018.
11.32.4.	Exhibit D.	Professional Services Schedule.
11.32.5.	Exhibit E.	List of A/E Project Manager and Subcontractors.
11.32.6.	Exhibit F.	Criminal Background Checks and Application Guidelines.
11.32.7.	Exhibit G.	A/E's Proposal dated December 16, 2019.

DocuSign Envelope ID: 4D7A9C98-4F30-4D1D-907E-9A92F807637B

11.32.8. Exhibit H. Approved HUB Subcontracting Plan.

11.32.9. Exhibit I. HUB Subcontracting Plan [Form].

11.32.10. Exhibit J. HUB Subcontracting Plan Progress Assessment Report [Form].

11.33. Survival of Terms. Termination of the Agreement for any reason shall not release A/E from any liability of obligation set forth in the Agreement that is expressly stated to survive any such termination or by its nature would be intended to be applicable following any such termination, including the provisions regarding confidentiality, indemnification, transition, records, audit, property rights, dispute resolution and invoice and verification.

[This Space Intentionally Left Blank]

DocuSign Envelope ID: 4D7A9C98-4F30-4D1D-907E-9A92F807637B

11.34. Entire Agreement and Modification. This Agreement and its integrated attachment(s) constitute the entire agreement of the parties and such are intended as a complete and exclusive statement of the promises, representations, negotiations, discussions, and other agreements that may have been made in connection with the subject matter hereof. Unless an integrated attachment to this Agreement specifically displays a mutual intent to amend a particular part of this Agreement, general conflicts in language between any such attachment and this Agreement shall be construed consistently with the terms of this Agreement. Unless otherwise expressly authorized by the terms of this Agreement, no modification, renewal, extension, or amendment to this Agreement shall be binding upon the parties unless the same is in writing and signed by the respective parties hereto.

TEXAS FACILITIES COMMISSION

DocuSigned by:
By: Mike Novak, Executive Director
B1C9FC0A8020417...

Mike Novak

Executive Director

Date of Execution: 03/19/2020 | 6:22 AM CDT

TOM GREEN AND COMPANY ENGINEERS, INC.

DocuSigned by:
By: Cameron Labunski, P.E., Principal Engineer
0BF2239D7C994EE...

Cameron Labunski

Principal Engineer

Date of Execution: 03/18/2020 | 7:50 PM CDT

GC CR

Dir

DED

DocuSign Envelope ID: 4D7A9C98-4F30-4D1D-907E-9A92F807637B

EXHIBIT A

2015 UNIFORM GENERAL CONDITIONS

DocuSign Envelope ID: 4D7A9C98-4F30-4D1D-907E-9A92F807637B

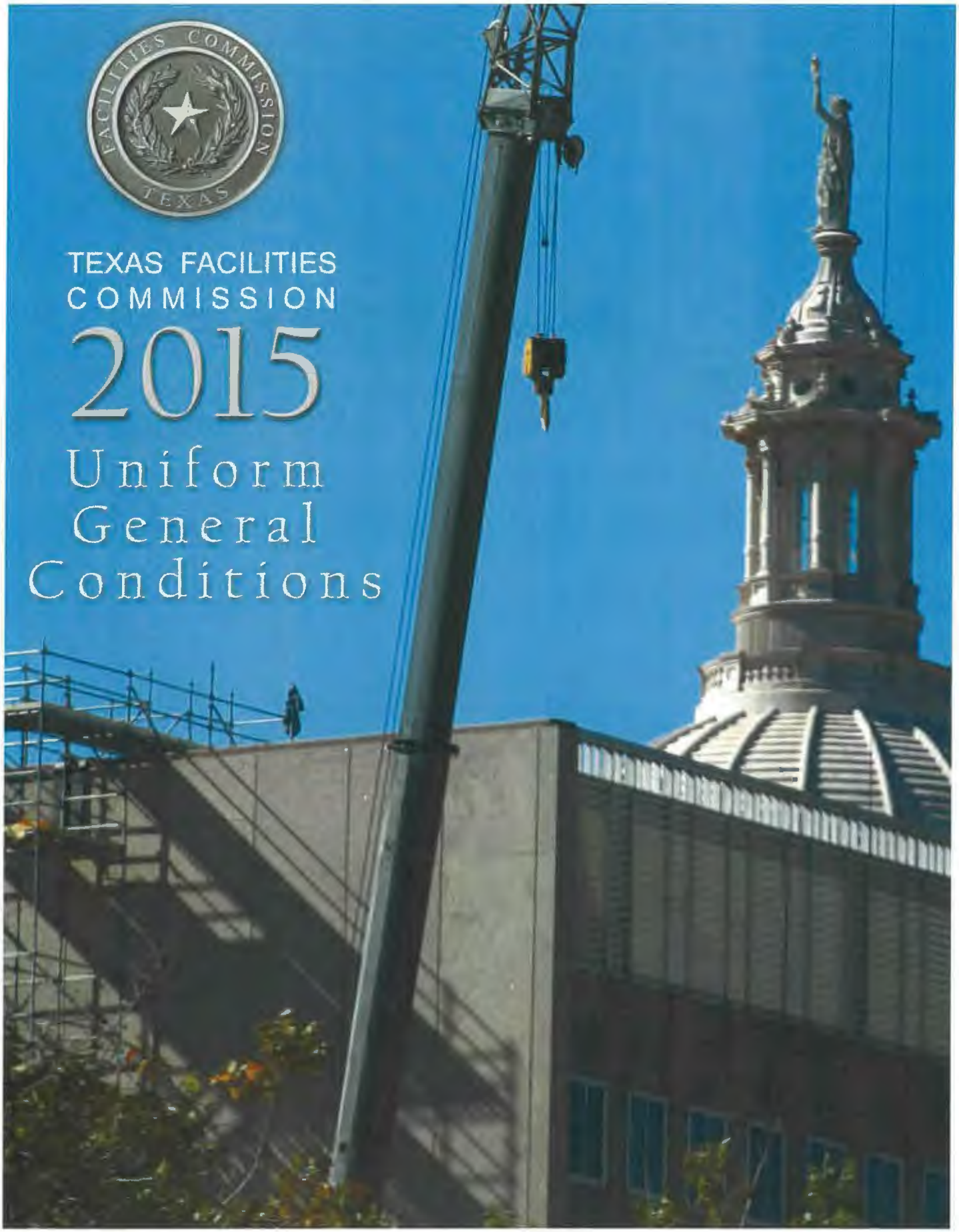

TEXAS FACILITIES COMMISSION

2015

Uniform General Conditions

DocuSign Envelope ID: 4D7A9C98-4F30-4D1D-907E-9A92F807637B

Uniform General Conditions for Construction Contracts

DocuSign Envelope ID: 4D7A9C98-4F30-4D1D-907E-9A92F807637B

Table of Contents

Article 1. Definitions 5

Article 2. Wage Rates and Other Laws Governing Construction 9

Article 3. General Responsibilities of Owner and Contractor 12

Article 4. Historically Underutilized Business (HUB) Subcontracting Plan 20

Article 5. Bonds and Insurance 22

Article 6. Construction Documents, Coordination Documents, and Record Documents 29

Article 7. Construction Safety 31

Article 8. Quality Control 33

Article 9. Construction Schedules 39

Article 10. Payments 44

Article 11. Changes 49

Article 12. Project Completion and Acceptance 53

Article 13. Warranty and Guarantee 58

Article 14. Suspension and Termination 60

Article 15. Dispute Resolution 63

Article 16. Miscellaneous 64

DocuSign Envelope ID: 4D7A9C98-4F30-4D1D-907E-9A92F807637B

Article 1. Definitions

Unless the context clearly requires another meaning, the following terms have the meaning assigned herein.

1.1 *Addendum/Addenda* means formally issued written or graphic modifications and/or interpretations of the Construction Documents that may add to, delete from, clarify or correct the description and/or scope of the Work. Addenda are issued during the bidding phase of the project.

1.2 *Application for Payment* means Contractor's monthly partial invoice for payment that includes any portion of the Work that has been completed for which an invoice has not been submitted and performed in accordance with the requirements of the Contract Documents. The Application for Payment accurately reflects the progress of the Work, is itemized based on the Schedule of Values, bears the notarized signature of Contractor, and shall not include subcontracted items for which Contractor does not intend to pay.

1.3 *Application for Final Payment* means Contractor's final invoice for payment that includes any portion of the Work that has been completed for which an invoice has not been submitted, amounts owing to adjustments to the final Contract Sum resulting from approved change orders, and release of remaining Contractor's retainage.

1.4 *Architect/Engineer (A/E)* means a person registered as an architect pursuant to Tex. Occ. Code Ann., Ch. 1051, as a landscape architect pursuant to Tex. Occ. Code Ann., Ch. 1052, a person licensed as a professional engineer pursuant Tex. Occ. Code Ann., Ch. 1001, and/or a firm employed by Owner or Design-Build Contractor to provide professional architectural or engineering services and to exercise overall responsibility for the design of a Project or a significant portion thereof, and to perform the contract administration responsibilities set forth in the Contract.

1.5 *Authority Having Jurisdiction* means a federal, state, local, or other regional department, or an individual such as a fire marshal, building official, electrical inspector, utility provider or other individual having statutory authority.

1.6 *Baseline Schedule* means the initial time schedule prepared by Contractor for Owner's information and acceptance that conveys Contractor's and Subcontractors' activities (including coordination and review activities required in the Contract Documents to be performed by A/E and ODR), durations, and sequence of work related to the entire Project to the extent required by the Contract Documents. The schedule clearly demonstrates the critical path of activities, durations and necessary predecessor conditions that drive the end date of the schedule. The Baseline Schedule shall not exceed the time limit current under the Contract Documents.

1.7 *Certificate of Final Completion* means the certificate issued by A/E that documents, to the best of A/E's knowledge and understanding, Contractor's completion of all

DocuSign Envelope ID: 4D7A9C98-4F30-4D1D-907E-9A92F807637B

Contractor's Punchlist items and pre-final Punchlist items, final cleanup and Contractor's provision of Record Documents, operations and maintenance manuals, and all other closeout documents required by the Contract Documents.

1.8 *Certificate of Substantial Completion* means the certificate executed by the A/E, ODR and Contractor that documents to the best of A/E's and ODR's knowledge and understanding, Contractor's sufficient completion of the work in accordance with the Contract, so as to be operational and fit for the use intended.

1.9 *Change Order* means a written modification of the Contract between Owner and Contractor, signed by Owner, Contractor, and A/E.

1.10 *Close-out Documents* mean the product brochures, submittals, product/equipment maintenance and operations instructions, manuals, and other documents/warranties, record documents, affidavit of payment, release of lien and claim, and as may be further defined, identified, and required by the Contract Documents.

1.11 *Contract* means the entire agreement between Owner and Contractor, including all of the Contract Documents.

1.12 *Contract Date* is the date when the agreement between Owner and Contractor becomes effective.

1.13 *Contract Documents* mean those documents identified as a component of the agreement (Contract) between Owner and Contractor. These may include, but are not limited to, Drawings; Specifications; General, Supplementary General, and Special Conditions; and all pre-bid and/or pre-proposal addenda.

1.14 *Contract Sum* means the total compensation payable to Contractor for completion of the Work in accordance with the terms of the Contract.

1.15 *Contract Time* means the period between the start date identified in the Notice to Proceed with construction and the Substantial Completion date identified in the Notice to Proceed or as subsequently amended by a Change Order.

1.16 *Contractor* means the individual, corporation, limited liability company, partnership, firm, or other entity contracted to perform the Work, regardless of the type of construction contract used, so that the term as used herein includes a Construction Manager-at-Risk or a Design-Build firm as well as a general or prime Contractor. The Contract Documents refer to Contractor as if singular in number.

1.17 *Construction Documents* mean the Drawings, Specifications, and other documents issued to build the Project. Construction Documents become part of the Contract Documents when listed in the Contract or any Change Order.

1.18 *Construction Manager-at-Risk*, in accordance with Tex. Gov't Code, Ch. 2166, means a sole proprietorship, partnership, corporation, or other legal entity that assumes the risk for construction, rehabilitation, alteration, or repair of a facility at the

DocuSign Envelope ID: 4D7A9C98-4F30-4D1D-907E-9A92F807637B

contracted price as a general contractor and provides consultation to Owner regarding construction during and after the design of the facility.

1.19 *Date of Commencement* means the date designated in the Notice to Proceed for Contractor to commence the Work.

1.20 *Day* means a calendar day unless otherwise specifically stipulated.

1.21 *Design-Build* means a project delivery method in which the detailed design and subsequent construction is provided through a single contract with a Design-Build firm; a team, partnership, or legal entity that includes design professionals and a builder. The Design-Build Project delivery shall be implemented in accordance with Tex. Gov't Code § 2166.2531.

1.22 *Drawings* mean that product of A/E which graphically depicts the Work.

1.23 *Final Completion* means the date determined and certified by A/E and Owner on which the Work is fully and satisfactorily complete in accordance with the Contract.

1.24 *Final Payment* means the last and final monetary compensation made to Contractor for any portion of the Work that has been completed and accepted for which payment has not been made, amounts owing to adjustments to the final Contract Sum resulting from approved change orders, and release of Contractor's retainage.

1.25 *Historically Underutilized Business (HUB)* pursuant to Tex. Gov't Code, Ch. 2161, means a business that is at least 51% owned by an Asian Pacific American, a Black American, a Hispanic American, a Native American and/or an American Woman; is an entity with its principal place of business in Texas; and has an owner residing in Texas with proportionate interest that actively participates in the control, operations, and management of the entity's affairs.

1.26 *Notice to Proceed* means written document informing Contractor of the dates beginning Work and the dates anticipated for Substantial Completion.

1.27 *Open Item List* means a list of work activities, Punchlist items, changes or other issues that are not expected by Owner and Contractor to be complete prior to Substantial Completion.

1.28 *Owner* means the State of Texas, and any agency of the State of Texas, acting through the responsible entity of the State of Texas identified in the Contract as Owner.

1.29 *Owner's Designated Representative (ODR)* means the individual assigned by Owner to act on its behalf and to undertake certain activities as specifically outlined in the Contract. ODR is the only party authorized to direct changes to the scope, cost, or time of the Contract.

DocuSign Envelope ID: 4D7A9C98-4F30-4D1D-907E-9A92F807637B

1.30 *Project* means all activities necessary for realization of the Work. This includes design, contract award(s), execution of the Work itself, and fulfillment of all Contract and warranty obligations.

1.31 *Progress Assessment Report (PAR)* means the monthly compliance report to Owner verifying compliance with the HUB subcontracting plan (HSP).

1.32 *Proposed Change Order (PCO)* means a document that informs Contractor of a proposed change in the Work and appropriately describes or otherwise documents such change including Contractor's response of pricing for the proposed change.

1.33 *Punchlist* means a list of items of Work to be completed or corrected by Contractor after Substantial Completion. Punchlists indicate items to be finished, remaining Work to be performed, or Work that does not meet quality or quantity requirements as required in the Contract Documents.

1.34 *Record Documents* mean the drawing set, Specifications, and other materials maintained by Contractor that documents all addenda, Architect's Supplemental Instructions, Change Orders and postings and markings that record the as-constructed conditions of the Work and all changes made during construction.

1.35 *Request for Information (RFI)* means a written request by Contractor directed to A/E or ODR for a clarification of the information provided in the Contract Documents or for direction concerning information necessary to perform the Work that may be omitted from the Contract Documents.

1.36 *Samples* mean representative physical examples of materials, equipment, or workmanship used to confirm compliance with requirements and/or to establish standards for use in execution of the Work.

1.37 *Schedule of Values* means the detailed breakdown of the cost of the materials, labor, and equipment necessary to accomplish the Work as described in the Contract Documents, submitted by Contractor for approval by Owner and A/E.

1.38 *Shop Drawings* mean the drawings, diagrams, illustrations, schedules, performance charts, brochures, and other data prepared by Contractor or its agents which detail a portion of the Work.

1.39 *Site* means the geographical area of the location of the Work.

1.40 *Special Conditions* mean the documents containing terms and conditions which may be unique to the Project. Special Conditions are a part of the Contract Documents and have precedence over the Uniform General Conditions and Supplementary General Conditions.

1.41 *Specifications* mean the written product of A/E that establishes the quality and/or performance of products utilized in the Work and processes to be used, including testing and verification for producing the Work.

DocuSign Envelope ID: 4D7A9C98-4F30-4D1D-907E-9A92F807637B

1.42 *Subcontractor* means a business entity that enters into an agreement with Contractor to perform part of the Work or to provide services, materials, or equipment for use in the Work.

1.43 *Submittal Register* means a list provided by Contractor of all items to be furnished for review and approval by A/E and Owner and as identified in the Contract Documents including anticipated sequence and submittal dates.

1.44 *Substantial Completion* means the date determined and certified by Contractor, A/E, and Owner when the Work, or a designated portion thereof, is sufficiently complete, in accordance with the Contract, so as to be operational and fit for the use intended.

1.45 *Supplementary General Conditions* mean procedures and requirements that modify the Uniform General Conditions. Supplementary General Conditions, when used, have precedence over the Uniform General Conditions.

1.46 *Unit Price Work* means the Work, or a portion of the Work, paid for based on incremental units of measurement.

1.47 *Unilateral Change Order (ULCO)* means a Change Order issued by Owner without the complete agreement of Contractor, as to cost and/or time.

1.48 *Work* means the administration, procurement, materials, equipment, construction and all services necessary for Contractor, and/or its agents, to fulfill Contractor's obligations under the Contract.

1.49 *Work Progress Schedule* means the continually updated time schedule prepared and monitored by Contractor that accurately indicates all necessary appropriate revisions as required by the conditions of the Work and the Project while maintaining a concise comparison to the Baseline Schedule.

Article 2. Wage Rates and Other Laws Governing Construction

2.1 Environmental Regulations. Contractor shall conduct activities in compliance with applicable laws and regulations and other requirements of the Contract relating to the environment and its protection at all times. Unless otherwise specifically determined, Owner is responsible for obtaining and maintaining permits related to stormwater run-off. Contractor shall conduct operations consistent with stormwater run-off permit conditions. Contractor is responsible for all items it brings to the Site, including hazardous materials, and all such items brought to the Site by its Subcontractors and suppliers, or by other entities subject to direction of Contractor. Contractor shall not incorporate hazardous materials into the Work without prior approval of Owner, and shall provide an affidavit attesting to such in association with request for Substantial Completion inspection.

2.2 Wage Rates. Contractor shall not pay less than the wage scale of the various classes of labor as shown on the prevailing wage schedule provided by Owner in the bid or proposal specifications. The specified wage rates are minimum rates only. Owner is

DocuSign Envelope ID: 4D7A9C98-4F30-4D1D-907E-9A92F807637B

not bound to pay any claims for additional compensation made by any Contractor because the Contractor pays wages in excess of the applicable minimum rate contained in the Contract. The prevailing wage schedule is not a representation that qualified labor adequate to perform the Work is available locally at the prevailing wage rates.

2.2.1 Notification to Workers. Contractor shall post the prevailing wage schedule in a place conspicuous to all workers on the Project Site When requested by Owner, Contractor shall furnish evidence of compliance with the Texas Prevailing Wage Law and the addresses of all workers.

2.2.1.1 Pursuant to Tex. Gov't Code § 2258.024, Contractor shall keep, on site, true and accurate records showing the name and occupation of each worker employed by the Contractor or subcontractors and the actual per diem wages paid to each worker. The record shall be open to inspection by the ODR and their agents at all reasonable hours for the duration of the contract.

2.2.1.2 With each application for progress payment, Contractor shall make available upon request certified payroll records, including from subcontractors of any tier level, on Form WH-347 as promulgated by the U.S. Department of Labor, as may be revised from time to time and in unlocked and unprotected Excel format, along with copies of any and all Contract Documents between Contractor and any Subcontractors. Pursuant to Tex. Penal Code §§ 37.02 and 37.10, Employees of Contractor and subcontractors, including all tier levels, shall be subject to prosecution for submitting certified payroll records that contain materially false information.

2.2.1.3 The prevailing wage schedule is determined by Owner in compliance with Tex. Gov't Code, Ch. 2258. Should Contractor at any time become aware that a particular skill or trade not reflected on Owner's prevailing wage schedule will be or is being employed in the Work, whether by Contractor or by Subcontractor, Contractor shall promptly inform ODR of the proposed wage to be paid for the skill along with a justification for same and ODR shall promptly concur with or reject the proposed wage and classification.

2.2.1.4 Contractor is responsible for determining the most appropriate wage for a particular skill in relation to similar skills or trades identified on the prevailing wage schedule. In no case, shall any worker be paid less than the wage indicated for laborers.

2.2.1.5 Pursuant to Tex. Labor Code § 214.008, Misclassification of Workers; Penalty. The Owner requires Contractor and all subcontractors properly classify individuals as Employees or Independent Contractors.

DocuSign Envelope ID: 4D7A9C98-4F30-4D1D-907E-9A92F807637B

2.2.2 Penalty for Violation. Contractor, and any Subcontractor, will pay to the State a penalty of sixty dollars ($60) for each worker employed for each day, or portion thereof, that the worker is paid less than the wage rates stipulated in the prevailing wage schedule

2.2.3 Complaints of Violations.

2.2.3.1 Owner's Determination of Good Cause. Upon receipt of information concerning a violation, Owner will conduct an investigation in accordance with Tex. Gov't Code, Ch. 2258 and make an initial determination as to whether good cause exists that a violation occurred. Upon making a good cause finding, Owner will retain the full amounts claimed by the claimant or claimants as the difference between wages paid and wages due under the prevailing wage schedule and any supplements thereto, together with the applicable penalties in accordance with Tex. Gov't Code § 2258.023, such amounts being subtracted from successive progress payments pending a final decision on the violation.

2.2.3.2 No Extension of Time. If Owner's determination proves valid that good cause existed to believe a violation had occurred, Contractor is not entitled to an extension of time for any delay arising directly or indirectly from the arbitration procedures.

2.2.3.3 Cooperation with Owner's Investigation. Contractor shall cooperate with Owner during any investigations hereunder. Such cooperation shall include, but not necessarily be limited to, timely providing the information and/or documentation requested by Owner, which may include certified payroll records on Form WH-347 as promulgated by the U.S. Department of Labor, as may be revised from time to time and in unlocked and unprotected Excel format; and copies of any and all Contract Documents between Contractor and any Subcontractors.

2.2.3.4 Notification to Owner. In the event Contractor or Subcontractor elect to appeal an initial determination made pursuant to Paragraph 2.2.3.1, the Contractor and/or Subcontractor, as applicable, shall deliver notice thereof to Owner.

2.3 Venue for Suits. The venue for any suit arising from the Contract will be in a court of competent jurisdiction in Travis County, Texas, or as may otherwise be designated in the Supplementary General Conditions.

2.4 Licensing of Trades. Contractor shall comply with all applicable provisions of State law related to license requirements for skilled tradesmen, contractors, suppliers and or laborers, as necessary to accomplish the Work. In the event Contractor, or one of its Subcontractors, loses its license during the term of performance of the Contract, Contractor shall promptly hire or contract with a licensed provider of the service at no additional cost to Owner.

DocuSign Envelope ID: 4D7A9C98-4F30-4D1D-907E-9A92F807637B

2.5 Royalties, Patents, and Copyrights. Contractor shall pay all royalties and license fees, defend suits or claims for infringement of copyrights and patent rights, and shall hold Owner harmless from loss on account thereof, but shall not be responsible for such defense or loss when a particular design, process or product of a particular manufacturer or manufacturers is required by the Contract Documents, or where the copyright violations are contained in Drawings, Specifications or other documents prepared by Owner or A/E. However, if Contractor has reason to believe that the required design, process, or product is an infringement of a copyright or a patent, Contractor shall be responsible for such loss unless such information is promptly furnished to A/E.

2.6 State Sales and Use Taxes. Owner qualifies for exemption from certain State and local sales and use taxes pursuant to the provisions of Tex. Tax Code, Ch. 151. Upon request from Contractor, Owner shall furnish evidence of tax exempt status. Contractor may claim exemption from payment of certain applicable State taxes by complying with such procedures as prescribed by the State Comptroller of Public Accounts. Owner acknowledges not all items qualify for exemption. Owner is not obligated to reimburse Contractor for taxes paid on items that qualify for tax exemption.

Article 3. General Responsibilities of Owner and Contractor

3.1 Owner's General Responsibilities. Owner is the entity identified as such in the Contract and referred to throughout the Contract Documents as if singular in number.

3.1.1 Preconstruction Conference. Prior to, or concurrent with, the issuance of Notice to Proceed with construction, a conference will be convened for attendance by Owner, Contractor, A/E and appropriate Subcontractors. The purpose of the conference is to establish a working understanding among the parties as to the Work, the operational conditions at the Project Site, and general administration of the Project. Topics include communications, schedules, procedures for handling Shop Drawings and other submittals, processing Applications for Payment, maintaining required records and all other matters of importance to the administration of the Project and effective communications between the Project team members.

3.1.2 Owner's Designated Representative. Prior to the start of construction, Owner will identify Owner's Designated Representative (ODR), who has the express authority to act and bind Owner to the extent and for the purposes described in the various Articles of the Contract, including responsibilities for general administration of the Contract.

3.1.2.1 Unless otherwise specifically defined elsewhere in the Contract Documents, ODR is the single point of contact between Owner and Contractor. Notice to ODR, unless otherwise noted, constitutes notice to Owner under the Contract.

DocuSign Envelope ID: 4D7A9C98-4F30-4D1D-907E-9A92F807637B

3.1.2.2 All directives on behalf of Owner will be conveyed to Contractor and A/E by ODR in writing.

3.1.2.3 Owner will furnish or cause to be furnished, free of charge, the number of complete sets of the Drawings, Specifications, and addenda as provided in the Supplementary General Conditions or Special Conditions.

3.1.2.4 The ODR will establish the protocol for planning, scheduling and documenting progress meetings with provisions for absence of various project team members that have a key role in these duties.

3.1.3 Owner Supplied Materials and Information.

3.1.3.1 Owner will furnish to Contractor those surveys describing the physical characteristics, legal description, limitations of the Site, Site utility locations, and other information used in the preparation of the Contract Documents.

3.1.3.2 Owner will provide information, equipment, or services under Owner's control to Contractor with reasonable promptness.

3.1.4 Availability of Lands. Owner will furnish, as indicated in the Contract, all required rights to use the lands upon which the Work occurs. This includes rights-of-way and easements for access and such other lands that are designated for use by Contractor. Contractor shall comply with all Owner identified encumbrances or restrictions specifically related to use of lands so furnished. Owner will obtain and pay for easements for permanent structures or permanent changes in existing facilities,

3.1.5 Limitation on Owner's Duties.

3.1.5.1 Owner will not supervise, direct, control or have authority over or be responsible for Contractor's means, methods, technologies, sequences or procedures of construction or the safety precautions and programs incident thereto. Owner is not responsible for any failure of Contractor to comply with laws and regulations applicable to the Work. Owner is not responsible for the failure of Contractor to perform or furnish the Work in accordance with the Contract Documents. Except as provided in Section 2.5, Owner is not responsible for the acts or omissions of Contractor, or any of its Subcontractors, suppliers or of any other person or organization performing or furnishing any of the Work on behalf of Contractor.

3.1.5.2 Owner will not take any action in contravention of a design decision made by A/E in preparation of the Contract Documents, when such actions are in conflict with statutes under which A/E is licensed for the protection of the public health and safety.

DocuSign Envelope ID: 4D7A9C98-4F30-4D1D-907E-9A92F807637B

3.2 Role of Architect/Engineer. Unless specified otherwise in the Contract between Owner and Contractor, A/E shall provide general administration services for Owner during the construction phase of the project. Written correspondence, requests for information, and Shop Drawings/submittals shall be directed to A/E for action. A/E has the authority to act on behalf of Owner to the extent provided in the Contract Documents, unless otherwise modified by written instrument, which will be furnished to Contractor by ODR, upon request.

3.2.1 Site Visits.

3.2.1.1 A/E will make visits to the Site at intervals as provided in the A/E's Contract with Owner, to observe the progress and the quality of the various aspects of Contractor's executed Work and report findings to Owner.

3.2.1.2 A/E has the authority to interpret Contract Documents and inspect the Work for compliance and conformance with the Contract. Except as referenced in Paragraph 3.1.5.2, Owner retains the sole authority to accept or reject Work and issue direction for correction, removal, or replacement of Work.

3.2.2 Clarifications and Interpretations. It may be determined that clarifications or interpretations of the Contract Documents are necessary. Upon direction by ODR, such clarifications or interpretations will be provided by A/E consistent with the intent of the Contract Documents. A/E will issue these clarifications with reasonable promptness to Contractor as A/E's supplemental instruction ("ASI") or similar instrument. If Contractor believes that such clarification or interpretation justifies an adjustment in the Contract Sum or the Contract Time, Contractor shall so notify Owner in accordance with the provisions of Article 11.

3.2.3 Limitations on Architect/Engineer Authority. A/E is not responsible for:

3.2.3.1 Contractor's means, methods, techniques, sequences, procedures, safety, or programs incident to the Project, nor will A/E supervise, direct, control or have authority over the same;

3.2.3.2 The failure of Contractor to comply with laws and regulations applicable to the furnishing or performing the Work;

3.2.3.3 Contractor's failure to perform or furnish the Work in accordance with the Contract Documents; or

3.2.3.4 Acts or omissions of Contractor, or of any other person or organization performing or furnishing any of the Work.

3.3 Contractor's General Responsibilities. Contractor is solely responsible for implementing the Work in full compliance with all applicable laws and the Contract Documents and shall supervise and direct the Work using the best skill and attention

DocuSign Envelope ID: 4D7A9C98-4F30-4D1D-907E-9A92F807637B

to assure that each element of the Work conforms to the Contract requirements. Contractor is solely responsible for all construction means, methods, techniques, safety, sequences, coordination, procedures and protection of the installed work as part of the contract until substantial completion of the project. Contractor remains responsible for the care and protection of materials and Work in the areas where punch list items are completed until Final Completion.

3.3.1 Project Administration. Contractor shall provide Project administration for all Subcontractors, vendors, suppliers, and others involved in implementing the Work and shall coordinate administration efforts with those of A/E and ODR in accordance with these general conditions and other provisions of the Contract, and as outlined in the preconstruction conference. Contractor's Project Administration includes periodic daily reporting on weather, work progress, labor, materials, equipment, obstructions to prosecution of the work, accidents and injuries in accordance with the Contract and transmitted no less frequently than on a weekly basis.

3.3.2 Contractor's Management Personnel. Contractor shall employ a competent person or persons who will be present at the Project Site during the progress of the Work to supervise or oversee the work. The competent persons are subject to the approval of ODR. Contractor shall not change approved staff during the course of the project without the written approval of ODR unless the staff member leaves the employment of Contractor. Contractor shall provide additional quality control, safety and other staff as stated in the Supplementary General Conditions.

3.3.3 Labor. Contractor shall provide competent, suitably qualified personnel to survey, lay-out, and construct the Work as required by the Contract Documents and maintain good discipline and order at the Site at all times.

3.3.4 Services, Materials, and Equipment. Unless otherwise specified, Contractor shall provide and assume full responsibility for all services, materials, equipment, labor, transportation, construction equipment and machinery, tools, appliances, fuel, power, light, heat, telephone, water, sanitary facilities, temporary facilities, and all other facilities, incidentals, and services necessary for the construction, performance, testing, start-up, inspection and completion of the Work.

3.3.5 Contractor General Responsibility. For Owner furnished equipment or material that will be in the care, custody, and control of Contractor, Contractor is responsible for damage or loss. Owner shall deliver to Contractor a complete list and respective values of such materials or equipment and make an equitable adjustment to the contract amount for any increase in cost of Builder's Risk insurance.

3.3.6 Non-Compliant Work. Should A/E and/or ODR identify Work as non-compliant with the Contract Documents, A/E and/or ODR shall communicate the finding to Contractor, and Contractor shall correct such Work at no additional cost to the Owner. The approval of Work by either A/E or

DocuSign Envelope ID: 4D7A9C98-4F30-4D1D-907E-9A92F807637B

ODR does not relieve Contractor from the obligation to comply with all requirements of the Contract Documents.

3.3.7 Subcontractors. Contractor shall not employ any Subcontractor, supplier or other person or organization, whether initially or as a substitute, against whom Owner shall have reasonable objection. Owner will communicate such objections in writing within ten (10) days of receipt of Contractor's intent to use such Subcontractor, supplier, or other person or organization. Contractor is not required to employ any Subcontractor, supplier or other person or organization to furnish any of the work to whom Contractor has reasonable objection. Contractor shall not substitute Subcontractors without the acceptance of Owner. Pursuant to Tex. Gov't Code § 2269.256(b), if the Contractor reviews, evaluates and recommends that the Owner accept a bid or proposal from a Subcontractor but the Owner requires another bid or proposal to be accepted, Owner shall compensate the Contractor by a change in price, time or guaranteed maximum cost for any additional cost or risk the Contractor will incur because of Owner's requirement to select another bid or proposal rather than the one recommended.

3.3.7.1 All Subcontracts and supply contracts shall be consistent with and bind the Subcontractors and suppliers to the terms and conditions of the Contract Documents including provisions of the Contract between Contractor and Owner.

3.3.7.2 Contractor shall be solely responsible for scheduling and coordinating the Work of Subcontractors, suppliers and other persons and organizations performing or furnishing any of the Work under a direct or indirect contract with Contractor. Require all Subcontractors, suppliers and such other persons and organizations performing or furnishing any of the Work to communicate with Owner only through Contractor. Contractor shall furnish to Owner a copy, at Owner's request, of each first-tier subcontract promptly after its execution. Contractor agrees that Owner has no obligation to review or approve the content of such contracts and that providing Owner such copies in no way relieves Contractor of any of the terms and conditions of the Contract, including, without limitation, any provisions of the Contract which require the Subcontractor to be bound to Contractor in the same manner in which Contractor is bound to Owner.

3.3.8 Continuing the Work. Contractor shall carry on the Work and adhere to the progress schedule during all disputes, disagreements, or alternative resolution processes with Owner. Contractor shall not delay or postpone any Work because of pending unresolved disputes, disagreements or alternative resolution processes, except as Owner and Contractor may agree in writing.

DocuSign Envelope ID: 4D7A9C98-4F30-4D1D-907E-9A92F807637B

3.3.9 Cleaning. Contractor shall at all times, keep the Site and the Work clean and free from accumulation of waste materials or rubbish caused by the construction activities under the Contract. Contractor shall ensure that the entire Project is thoroughly cleaned prior to requesting Substantial Completion inspection and, again, upon completion of the Project prior to the final inspection.

3.3.10 Acts and Omissions of Contractor, its Subcontractors, and Employees. Contractor shall be responsible for acts and omissions of his employees and all its Subcontractors, their agents and employees. Owner may, in writing, require Contractor to remove from the Project any of Contractor's or its Subcontractor's employees whom ODR finds to be careless, incompetent, unsafe, uncooperative, disruptive, or otherwise objectionable.

3.3.11 Acts or Omissions. Contractor shall indemnify and hold harmless the State of Texas and Customers, AND/OR THEIR OFFICERS, AGENTS, EMPLOYEES, REPRESENTATIVES, CONTRACTORS, ASSIGNEES, AND/OR DESIGNEES FROM ANY AND ALL LIABILITY, ACTIONS, CLAIMS, DEMANDS, OR SUITS, AND ALL RELATED COSTS, ATTORNEY FEES, AND EXPENSES arising out of, or resulting from any acts or omissions of Contractor or its agents, employees, subcontractors, Order Fulfillers, or suppliers of subcontractors in the execution or performance of the Contract and any Purchase Orders issued under the Contract. THE DEFENSE SHALL BE COORDINATED BY CONTRACTOR WITH THE OFFICE OF THE ATTORNEY GENERAL WHEN TEXAS STATE AGENCIES ARE NAMED DEFENDANTS IN ANY LAWSUIT AND CONTRACTOR MAY NOT AGREE TO ANY SETTLEMENT WITHOUT FIRST OBTAINING THE CONCURRENCE FROM THE OFFICE OF THE ATTORNEY GENERAL. CONTRACTOR AND OWNER AGREE TO FURNISH TIMELY WRITTEN NOTICE TO EACH OTHER OF ANY SUCH CLAIM.

3.3.12 Infringements.

3.3.12.1 Contractor shall indemnify and hold harmless the State of Texas and Customers, AND/OR THEIR EMPLOYEES, AGENTS, REPRESENTATIVES, CONTRACTORS, ASSIGNEES, AND/OR DESIGNEES from any and all third party claims involving infringement of United States patents, copyrights, trade and service marks, and any other intellectual or intangible property rights in connection with the PERFORMANCES OR ACTIONS OF CONTRACTOR PURSUANT TO THIS CONTRACT. CONTRACTOR AND THE CUSTOMER AGREE TO FURNISH TIMELY WRITTEN NOTICE TO EACH OTHER OF ANY SUCH CLAIM. CONTRACTOR SHALL BE LIABLE TO PAY ALL COSTS OF DEFENSE INCLUDING ATTORNEYS' FEES. THE DEFENSE SHALL BE COORDINATED BY CONTRACTOR WITH THE OFFICE OF THE ATTORNEY GENERAL WHEN TEXAS STATE AGENCIES ARE NAMED DEFENDANTS IN

DocuSign Envelope ID: 4D7A9C98-4F30-4D1D-907E-9A92F807637B

ANY LAWSUIT AND CONTRACTOR MAY NOT AGREE TO ANY SETTLEMENT WITHOUT FIRST OBTAINING THE CONCURRENCE FROM THE OFFICE OF THE ATTORNEY GENERAL.

3.3.12.2 Contractor shall have no liability under this section if the alleged infringement is caused in whole or in part by: (i) use of the product or service for a purpose or in a manner for which the product or service was not designed, (ii) any modification made to the product without Contractor's written approval, (iii) any modifications made to the product by Contractor pursuant to Customer's specific instructions, (iv) any intellectual property right owned by or licensed to Customer, or (v) any use of the product or service by Customer that is not in conformity with the terms of any applicable license agreement.

3.3.12.3 If Contractor becomes aware of an actual or potential claim, or Customer provides Contractor with notice of an actual or potential claim, Contractor may (or in the case of an injunction against Customer, shall), at Contractor's sole option and expense; (i) procure for the Customer the right to continue to use the affected portion of the product or service, or (ii) modify or replace the affected portion of the product or service with functionally equivalent or superior product or service so that Customer's use is non-infringing.

3.3.12.4 Taxes/Workers' Compensation/Unemployment Insurance–Including Indemnity.

3.3.12.4.1 CONTRACTOR AGREES AND ACKNOWLEDGES THAT DURING THE EXISTENCE OF THIS CONTRACT, CONTRACTOR SHALL BE ENTIRELY RESPONSIBLE FOR THE LIABILITY AND PAYMENT OF CONTRACTOR'S AND CONTRACTOR'S EMPLOYEES' TAXES OF WHATEVER KIND, ARISING OUT OF THE PERFORMANCES IN THIS CONTRACT. CONTRACTOR AGREES TO COMPLY WITH ALL STATE AND FEDERAL LAWS APPLICABLE TO ANY SUCH PERSONS, INCLUDING LAWS REGARDING WAGES, TAXES, INSURANCE, AND WORKERS' COMPENSATION. THE CUSTOMER AND/OR THE STATE SHALL NOT BE LIABLE TO CONTRACTOR, ITS EMPLOYEES, AGENTS, OR OTHERS FOR THE PAYMENT OF TAXES OR THE PROVISION OF UNEMPLOYMENT INSURANCE AND/OR WORKERS' COMPENSATION OR ANY BENEFIT

DocuSign Envelope ID: 4D7A9C98-4F30-4D1D-907E-9A92F807637B

AVAILABLE TO A STATE EMPLOYEE OR EMPLOYEE OF ANOTHER GOVERNMENTAL ENTITY CUSTOMER.

3.3.12.4.1 CONTRACTOR AGREES TO INDEMNIFY AND HOLD HARMLESS OWNER, THE STATE OF TEXAS AND/OR THEIR EMPLOYEES, AGENTS, REPRESENTATIVES, CONTRACTORS, AND/OR ASSIGNEES FROM ANY AND ALL LIABILITY, ACTIONS, CLAIMS, DEMANDS, OR SUITS, AND ALL RELATED COSTS, ATTORNEYS' FEES, AND EXPENSES, RELATING TO TAX LIABILITY, UNEMPLOYMENT INSURANCE AND/OR WORKERS' COMPENSATION IN ITS PERFORMANCE UNDER THIS CONTRACT. CONTRACTOR SHALL BE LIABLE TO PAY ALL COSTS OF DEFENSE INCLUDING ATTORNEYS' FEES. THE DEFENSE SHALL BE COORDINATED BY CONTRACTOR WITH THE OFFICE OF THE ATTORNEY GENERAL WHEN TEXAS STATE AGENCIES ARE NAMED DEFENDANTS IN ANY LAWSUIT AND VENDOR MAY NOT AGREE TO ANY SETTLEMENT WITHOUT FIRST OBTAINING THE CONCURRENCE FROM THE OFFICE OF THE ATTORNEY GENERAL. CONTRACTOR AND OWNER AGREE TO FURNISH TIMELY WRITTEN NOTICE TO EACH OTHER OF ANY SUCH CLAIM.

3.3.12.5 The provisions of this indemnification are solely for the benefit of the parties hereto and not intended to create or grant any rights, contractual or otherwise, to any other person or entity.

3.3.12.6 Contractor shall promptly advise Owner in writing of any claim or demand against Owner or against Contractor which involves Owner and known to Contractor and related to or arising out of Contractor's activities under this Contract.

3.3.13 Ancillary Areas. Operate and maintain operations and associated storage areas at the site of the Work in accordance with the following:

3.3.13.1 Confine all Contractor operations, including storage of materials and employee parking upon the Site of Work, to areas designated by Owner.

DocuSign Envelope ID: 4D7A9C98-4F30-4D1D-907E-9A92F807637B

3.3.13.2 Contractor may erect, at its own expense, temporary buildings that will remain its property. Remove such buildings and associated utility service lines upon completion of the Work, unless Contractor requests and Owner provides written consent that it may abandon such buildings and utilities in place.

3.3.13.3 Use only established roadways or construct and use such temporary roadways as may be authorized by Owner. Do not allow load limits of vehicles to exceed the limits prescribed by appropriate regulations or law. Provide protection to road surfaces, curbs, sidewalks, trees, shrubbery, sprinkler systems, drainage structures and other like existing improvements to prevent damage and repair any damage thereto at the expense of Contractor.

3.3.13.4 Owner may restrict Contractor's entry to the Site to specifically assigned entrances and routes.

3.3.14 Separate Contracts. Owner reserves the right to award other contracts in connection with other portions of the Project under these same or substantially similar contract conditions, including those portions related to insurance and waiver of subrogation. Owner reserves the right to perform operations related to the Project with Owner's own forces.

3.3.15 Under a system of separate contracts, the conditions described herein continue to apply except as may be amended by change order.

3.3.16 Contractor shall cooperate with other contractors or forces employed on the Project by Owner, including providing access to Site and Project information as requested.

3.3.17 Owner shall be reimbursed by Contractor for costs incurred by Owner which are payable to a separate contractor because of delays, improperly timed activities, or defective construction by Contractor. Owner will equitably adjust the Contract by Change Order for costs incurred by Contractor because of delays, improperly timed activities, damage to the Work or defective construction by a separate contractor.

Article 4. Historically Underutilized Business (HUB) Subcontracting Plan

4.1 General Description. The purpose of the Historically Underutilized Business (HUB) program is to promote equal business opportunities for economically disadvantaged persons (as defined by Tex. Gov't Code, Ch. 2161) to contract with the State of Texas in accordance with the goals specified in the State of Texas Disparity Study. The HUB program annual procurement utilization goals are defined in 34 T.A.C. § 20.13(b).

4.1.1 State agencies are required by statute to make a good faith effort to assist HUBs in participating in contract awards issued by the State. 34 T.A.C. §

DocuSign Envelope ID: 4D7A9C98-4F30-4D1D-907E-9A92F807637B

20.13(b) outlines the State's policy to encourage the utilization of HUBs in State contracting opportunities through race, ethnic and gender neutral means.

4.1.2 A Contractor who contracts with the State in an amount of $100,000 or greater is required to make a good faith effort to award subcontracts to HUBs in accordance with 34 T.A.C. § 20.14(a)(2)(A) by submitting a HUB subcontracting plan within twenty-four (24) hours after the bid or response is due and complying with the HUB subcontracting plan after it is accepted by Owner and during the term of the Contract.

4.2 Compliance with Approved HUB Subcontracting Plan. Contractor, having been awarded this Contract in part by complying with the HUB program statute and rules, hereby covenants to continue to comply with the HUB program as follows:

4.2.1 Prior to adding or substituting a Subcontractor, promptly notify Owner in the event a change is required for any reason to the accepted HUB subcontracting plan.

4.2.2 Conduct the good-faith effort activities required and provide Owner with necessary documentation to justify approval of a change to the approved HUB subcontracting plan.

4.2.3 Cooperate in the execution of a Change Order or such other approval of the change in the HUB subcontracting plans as Contractor and Owner may agree to.

4.2.4 Maintain and make available to Owner upon request business records documenting compliance with the accepted HUB subcontracting plan.

4.2.5 Upon receipt of payment for performance of Work, submit to Owner a compliance report, in the format required by Owner that demonstrates Contractor's performance of the HUB subcontracting plan.

4.2.5.1 Progress Assessment Report (PAR): monthly compliance reports to Owner (contracting agency), verifying their compliance with the HUB subcontracting plan, including the use/expenditures they have made to Subcontractors. (The PAR is available in the Index Forms Library on the Facilities Design & Construction page of the Texas Facilities Commission website.

4.2.6 Promptly and accurately explain and provide supplemental information to Owner to assist in Owner's investigation of Contractor's good-faith effort to fulfill the HUB subcontracting plan and the requirements under 34 T.A.C. § 20.14(a)(1).

4.3 Failure to Demonstrate Good-Faith Effort. Upon a determination by Owner that Contractor has failed to demonstrate a good-faith effort to fulfill the HUB subcontracting plan or any Contract covenant detailed above, Owner may, in addition to all other remedies available to it, report the failure to perform to the Comptroller of

DocuSign Envelope ID: 4D7A9C98-4F30-4D1D-907E-9A92F807637B

Public Accounts, Texas Procurement and Support Services Division, Historically Underutilized Business Program and may bar Contractor from future contracting opportunities with Owner.

Article 5. Bonds and Insurance

5.1 Construction Bonds. Contractor is required to tender to Owner, prior to commencing the Work, performance and payment bonds, as required by Tex. Gov't Code, Ch. 2253. On Construction Manager-at-Risk and Design-Build Projects the Owner shall require a security bond, as described in Subsection 5.1.2 below.

5.1.1 Bond Requirements. Each bond shall be executed by a corporate surety or sureties authorized to do business in the State of Texas and acceptable to Owner, on Owner's form, and in compliance with the relevant provisions of the Texas Insurance Code. If any bond is for more than ten (10) percent of the surety's capital and surplus, Owner may require certification that the company has reinsured the excess portion with one or more reinsurers authorized to do business in the State. A reinsurer may not reinsure for more than ten (10) percent of its capital and surplus. If a surety upon a bond loses its authority to do business in the State, Contractor shall, within thirty (30) days after such loss, furnish a replacement bond at no added cost to Owner.

5.1.1.1 A Performance bond is required if the Contract Sum is in excess of $100,000. The performance bond is solely for the protection of Owner. The performance bond is to be for the Contract Sum to guarantee the faithful performance of the Work in accordance with the Contract Documents. The form of the bond shall be approved by the Office of the Attorney General of Texas. The performance bond shall be effective through Contractor's warranty period.

5.1.1.2 A Payment bond is required if the Contract price is in excess of $25,000. The payment bond is to be for the Contract Sum and is payable to Owner solely for the protection and use of payment bond beneficiaries. The form of the bond shall be approved by the Office of the Attorney General of Texas.

5.1.2 Security Bond. The security bond provides protection to Owner if Contractor presents an acceptable guaranteed maximum price ("GMP") to Owner and 1) fails to execute the GMP; or 2) fails to deliver the required payment and performance bonds within the time period stated below.

5.1.3 When Bonds Are Due.

5.1.3.1 Security bonds are due within ten (10) days of signing a Construction Manager-at-Risk or Design-Build Contract.

DocuSign Envelope ID: 4D7A9C98-4F30-4D1D-907E-9A92F807637B

5.1.3.2 Payment and performance bonds are due within ten (10) days of Contractor's receipt of a fully executed GMP on a Construction Manager-at-Risk project or the Contract Sum for a Design-Build project, or within ten (10) days of Contractor's receipt of a fully executed Contract on competitively bid or competitive sealed proposal projects.

5.1.4 Power of Attorney. Each bond shall be accompanied by a valid power of attorney (issued by the surety company and attached, signed and sealed with the corporate embossed seal, to the bond) authorizing the attorney-in-fact who signs the bond to commit the company to the terms of the bond, and stating any limit in the amount for which the attorney can issue a single bond.

5.1.5 Bond Indemnification. The process of requiring and accepting bonds and making claims there under shall be conducted in compliance with Tex. Gov't Code, Ch. 2253. IF FOR ANY REASON A STATUTORY PAYMENT OR PERFORMANCE BOND IS NOT HONORED BY THE SURETY, CONTRACTOR SHALL FULLY INDEMNIFY AND HOLD OWNER HARMLESS OF AND FROM ANY COSTS, LOSSES, OBLIGATIONS OR LIABILITIES IT INCURS AS A RESULT.

5.1.6 Furnishing Bond Information. Owner shall furnish certified copies of the payment bond and the related Contract to any qualified person seeking copies who complies with Tex. Gov't Code § 2253.026.

5.1.7 Claims on Payment Bonds. Claims on payment bonds must be sent directly to Contractor and his surety in accordance with Tex. Gov't Code § 2253.041. All payment bond claimants are cautioned that no lien exists on the funds unpaid to Contractor on such Contract, and that reliance on notices sent to Owner may result in loss of their rights against Contractor and/or his surety. Owner is not responsible in any manner to a claimant for collection of unpaid bills, and accepts no such responsibility because of any representation by any agent or employee.

5.1.8 Payment Claims when Payment Bond not Required. The rights of Subcontractors regarding payment are governed by Tex. Prop. Code §§ 53.231 – 53.239 when the value of the Contract between Owner and Contractor is less than $25,000.00. These provisions set out the requirements for filing a valid lien on funds unpaid to Contractor as of the time of filing the claim, actions necessary to release the lien and satisfaction of such claim.

5.1.9 Sureties. A surety shall be listed on the US Department of the Treasury's Listing of Approved Sureties maintained by the Bureau of Financial Management Service (FMS), www.fms.treas.gov/c570, stating companies holding Certificates of Authority as acceptable sureties on Federal bonds and acceptable reinsuring companies (FMS Circular 570).

DocuSign Envelope ID: 4D7A9C98-4F30-4D1D-907E-9A92F807637B

5.2 Insurance Requirements. Contractor shall carry insurance in the types and amounts indicated in this Article for the duration of the Contract. The insurance shall be evidenced by delivery to Owner of certificates of insurance executed by the insurer or its authorized agent stating coverages, limits, expiration dates and compliance with all applicable required provisions. Upon request, Owner, and/or its agents, shall be entitled to receive without expense, copies of the policies and all endorsements. Contractor shall update all expired policies prior to submission for monthly payment. Failure to update policies shall be reason for withholding of payment until renewal is provided to Owner.

5.2.1 Contractor shall provide and maintain all insurance coverage with the minimum amounts described below until the end of the warranty period unless otherwise stated in Supplementary General Conditions or Special Conditions. Failure to maintain insurance coverage, as required, is grounds for suspension of Work for cause pursuant to Article 14.

5.2.2 Contractor shall deliver to Owner true and complete copies of certificates and corresponding policy endorsements prior to the issuance of any Notice to Proceed.

5.2.3 Failure of Owner to demand such certificates or other evidence of Contractor's full compliance with these insurance requirements or failure of Owner to identify a deficiency in compliance from the evidence provided shall not be construed as a waiver of Contractor's obligation to maintain such insurance.

5.2.4 The insurance and insurance limits required herein shall not be deemed as a limitation on Contractor's liability under the indemnities granted to Owner in the Contract Documents.

5.2.5 The insurance coverage and limits established herein shall not be interpreted as any representation or warranty that the insurance coverage and limits necessarily will be adequate to protect Contractor.

5.2.6 Coverage shall be written on an occurrence basis by companies authorized and admitted to do business in the State of Texas and rated A or better by A.M. Best Company or similar rating company or otherwise acceptable to Owner.

5.2.6.1 Insurance Coverage Required.

5.2.6.1.1 Workers' Compensation. Insurance with limits as required by the Texas Workers' Compensation Act, with the policy endorsed to provide a waiver of subrogation in favor of Owner, employer's liability insurance of not less than:

$1,000,000 each accident;

DocuSign Envelope ID: 4D7A9C98-4F30-4D1D-907E-9A92F807637B

$1,000,000 disease each employee; and

$1,000,000 disease policy limit.

5.2.6.1.2 Commercial General Liability Insurance. Including premises, operations, independent contractor's liability, products and completed operations and contractual liability, covering, but not limited to, the liability assumed under the indemnification provisions of this Contract, fully insuring Contractor's liability for bodily injury (including death) and property damage with a minimum limit of:

$1,000,000 per occurrence;

$2,000,000 general aggregate;

$5,000 Medical Expense each person;

$1,000,000 Personal Injury and Advertising Liability;

$2,000,000 products and completed operations aggregate;

$50,000 Damage to Premises Rented to You; and

Coverage shall be on an "occurrence" basis.

The policy shall include coverage extended to apply to completed operations and explosion, collapse, and underground hazards. The policy shall include endorsement CG2503 Amendment of Aggregate Limits of Insurance (per Project) or its equivalent.

If the Work involves any activities within fifty (50) feet of any railroad, railroad protective insurance as may be required by the affected railroad, written for not less than the limits required by such railroad.

5.2.6.1.3 Asbestos Abatement Liability Insurance, including coverage for liability arising from the encapsulation, removal, handling, storage, transportation, and disposal of asbestos containing materials. *This requirement applies if the Work or the Project includes asbestos containing materials.

The combined single limit for bodily injury and property damage will be a minimum of $1,000,000 per occurrence.

DocuSign Envelope ID: 4D7A9C98-4F30-4D1D-907E-9A92F807637B

*Specific requirement for claims-made form: Required period of coverage will be determined by the following formula: continuous coverage for life of the Contract, plus one (1) year (to provide coverage for the warranty period), and an extended discovery period for a minimum of five (5) years which shall begin at the end of the warranty period.

Employer's liability limits for asbestos abatement will be:

$500,000 each accident;

$500,000 disease each employee; and

$500,000 disease policy limit.

If this Contract is for asbestos abatement only, the Special Form builder's risk or Special Form installation floater (e) is not required.

5.2.6.1.4 Comprehensive Automobile Liability Insurance, covering owned, hired, and non-owned vehicles, with a minimum combined single limit for bodily injury (including death) and property damage of $1,000,000 per accident. No aggregate shall be permitted for this type of coverage.

Such insurance is to include coverage for loading and unloading hazards.

5.2.6.1.5 Special Form Builder's Risk Insurance, if applicable (or Special Form installation floater for instances in which the project involves solely the installation of material and/or equipment). Coverage shall be Special Form, including, but not limited to, fire, extended coverage, vandalism and malicious mischief, theft and, if applicable, flood, earth movement and named storm. Builder's risk and installation floater limits shall be equal to 100 percent of the Contract Sum plus, if any, existing property and Owner-furnished equipment specified by Owner. The policy shall be written jointly in the names of Owner and Contractor. Subcontractors shall be named as additional insureds. The policy shall have endorsements as follows:

5.2.6.1.5.1 This insurance shall be specific as to coverage and not contributing insurance with any permanent insurance maintained on the property.

DocuSign Envelope ID: 4D7A9C98-4F30-4D1D-907E-9A92F807637B

5.2.6.1.5.2 This insurance shall not contain an occupancy clause suspending or reducing coverage should Owner partially occupy the Site and before the parties have determined Substantial Completion.

5.2.6.1.5.3 Loss, if any, shall be adjusted with and made payable to Owner as trustee for the insureds as their interests may appear. Owner shall be named as loss payee.

5.2.6.1.5.4 For renovation projects or projects that involve portions of Work contained within an existing structure, refer to Supplementary General and Special Conditions for possible additional builder's risk insurance requirements.

5.2.6.1.5.5 For Owner furnished equipment or materials that will be in care, custody or control of Contractor, Contractor will be responsible for damage and loss.

5.2.6.1.5.6 For those properties located within a Tier 1 or 2 windstorm area, named storm coverage must be provided with limits specified by Owner.

5.2.6.1.5.7 For those properties located in flood prone areas, flood insurance coverage must be provided with limits specified by Owner.

5.2.6.1.5.8 Builder's risk insurance policy shall remain in effect until Substantial Completion.

5.2.6.1.6 "Umbrella" Liability Insurance. Contractor shall obtain, pay for and maintain umbrella liability insurance during the Contract term, insuring Contractor for an amount of not less than amount specified in the Supplementary General Conditions or Special Conditions that provides coverage at least as broad as and applies in excess and follows form of the primary liability coverages required hereinabove. The policy shall provide "drop down" coverage where underlying primary insurance coverage limits are insufficient or exhausted.

DocuSign Envelope ID: 4D7A9C98-4F30-4D1D-907E-9A92F807637B

5.2.7 Policies must include the following clauses, as applicable:

5.2.7.1 This insurance shall not be canceled, materially changed, or non-renewed except after thirty (30) days written notice has been given to Owner.

5.2.7.2 It is agreed that Contractor's insurance shall be deemed primary with respect to any insurance or self insurance carried by Owner for liability arising out of operations under the Contract with Owner.

5.2.7.3 Owner, its officials, directors, employees, representatives, and volunteers are added as additional insureds as respects operations and activities of, or on behalf of the named insured performed under Contract with Owner. The additional insured status must cover completed operations as well. This is not applicable to workers' compensation policies.

5.2.7.4 A waiver of subrogation in favor of Owner shall be provided in all policies.

5.2.8 Without limiting any of the other obligations or liabilities of Contractor, Contractor shall require each Subcontractor performing work under the Contract, at Subcontractor's own expense, to maintain during the term of the Contract, the same stipulated minimum insurance including the required provisions and additional policy conditions as shown above. As an alternative, Contractor may include its Subcontractors as additional insureds on its own coverage as prescribed under these requirements. Contractor's certificate of insurance shall note in such event that Subcontractors are included as additional insureds and that Contractor agrees to provide workers' compensation for Subcontractors and their employees. Contractor shall obtain and monitor the certificates of insurance from each Subcontractor in order to assure compliance with the insurance requirements. Contractor must retain the certificates of insurance for the duration of the Contract plus five (5) years and shall have the responsibility of enforcing these insurance requirements among its Subcontractors. Owner shall be entitled, upon request and without expense, to receive copies of these certificates.

5.2.9 Workers' compensation insurance coverage must be provided for all workers at all tier levels and meet the statutory requirements of Tex. Lab. Code § 401.011(44) and specific to construction projects for public entities as required by Tex. Lab. Code § 406.096.

DocuSign Envelope ID: 4D7A9C98-4F30-4D1D-907E-9A92F807637B

Article 6. Construction Documents, Coordination Documents, and Record Documents

6.1 Drawings and Specifications.

6.1.1 Copies Furnished. Contractor will be furnished, free of charge, the number of complete sets of the Drawings, Specifications, and Addenda as provided in the Supplementary General Conditions or Special Conditions. Additional complete sets of Drawings and Specifications, if requested, will be furnished at reproduction cost to the entity requesting such additional sets. Electronic copies of such documents will be provided to Contractor without charge.

6.1.2 Ownership of Drawings and Specifications. All Drawings, Specifications and copies thereof furnished by A/E are to remain A/E's property. These documents are not to be used on any other project, and with the exception of the Contract record set and electronic versions needed for warranty operations, are to be returned to the A/E, upon request, following completion of the Work.

6.1.3 Interrelation of Documents. The Contract Documents as referenced in the Contract between Owner and Contractor are complimentary, and what is required by one shall be as binding as if required by all.

6.1.4 Resolution of Conflicts in Documents. Where conflicts may exist within the Contract Documents, the documents shall govern in the following order: (a) Change Orders, addenda, and written amendments to the Contract; (b) the Contract; (c) Drawings; (d) Specifications (but Specifications shall control over Drawings as to quality of materials and workmanship); and (e) other Contract Documents. Among categories of documents having the same order of precedence, the term or provision that includes the latest date shall control and more specific requirements shall govern over general requirements. Contractor shall notify A/E and ODR for resolution of the issue prior to executing the Work in question.

6.1.5 Contractor's Duty to Review Contract Documents. In order to facilitate its responsibilities for completion of the Work in accordance with and as reasonably inferable from the Contract Documents, prior to commencing the Work, Contractor shall examine and compare the Contract Documents, information furnished by Owner, relevant field measurements made by Contractor and any visible or reasonably anticipated conditions at the Site affecting the Work. This duty extends throughout the construction phase prior to commencing each particular work activity and/or system installation.

DocuSign Envelope ID: 4D7A9C98-4F30-4D1D-907E-9A92F807637B

6.1.6 Discrepancies and Omissions in Drawings and Specifications.

6.1.6.1 Promptly report to ODR and to A/E the discovery of any apparent error, omission or inconsistency in the Contract Documents prior to execution of the Work.

6.1.6.2 It is recognized that Contractor is not acting in the capacity of a licensed design professional, unless it is performing as a Design-Build firm.

6.1.6.3 It is further recognized that Contractor's examination of Contract Documents is to facilitate construction and does not create an affirmative responsibility to detect errors, omissions or inconsistencies or to ascertain compliance with applicable laws, building codes or regulations, unless it is performing as a Design-Build firm or a Construction Manager-at-Risk.

6.1.6.4 When performing as a Design-Build firm, Contractor has sole responsibility for discrepancies, errors, and omissions in the Drawings and Specifications.

6.1.6.5 When performing as a Construction Manager-at-Risk, Contractor has a shared responsibility with A/E for discovery and resolution of discrepancies, errors, and omissions in the Contract Documents. In such case, Contractor's responsibility pertains to review, coordination, and recommendation of resolution strategies within budget constraints.

6.1.6.6 Contractor has no liability for errors, omissions, or inconsistencies unless Contractor knowingly failed to report a recognized problem to Owner or the Work is executed under a Design-Build or Construction Manager-at-Risk Contract as outlined above. Should Contractor fail to perform the examination and reporting obligations of these provisions, Contractor is responsible for avoidable costs and direct and/or consequential damages.

6.2 Requirements for Record Documents. Contractor shall:

6.2.1 Maintain at the Site one copy of all Drawings, Specifications, addenda, approved submittals, Contract modifications, and all Project correspondence. Keep current and maintain Drawings and Specifications in good order with postings and markings to record actual conditions of Work and show and reference all changes made during construction. Provide Owner and A/E access to these documents.

DocuSign Envelope ID: 4D7A9C98-4F30-4D1D-907E-9A92F807637B

6.2.2 Maintain the Record Documents including Drawings, Specifications and other materials which reflect the actual field conditions and representations of the Work performed, whether it be directed by addendum, Change Order or otherwise. Make available all records prescribed herein for reference and examination by Owner and its representatives and agents.

6.2.3 Update the Record Documents at least monthly prior to submission of periodic partial pay estimates. Failure to maintain current Record Documents constitutes cause for denial of a progress payment otherwise due.

6.2.4 Prior to requesting Substantial Completion inspection Contractor shall furnish a copy of its marked-up Record Documents and a preliminary copy of each instructional manual, maintenance and operating manual, parts catalog, wiring diagrams, spare parts, specified written warranties and like publications, or parts for all installed equipment, systems, and like items and as described in the Contract Documents. (Unexecuted samples of the aforementioned documentation may be reviewed by ODR when the absence of substantial completion transactions preclude execution; however, Contractor remains obligated to provide fully executed copies of such materials prior to final payment.)

6.2.5 Once determined acceptable by ODR with input from A/E, provide one (1) reproducible copy and one (1) electronic media copy of all Record Documents, unless otherwise required by the Supplementary General Conditions or Special Conditions.

6.2.6 Contractor shall be responsible for updating the Record Documents for all Contractor initiated documents and changes to the Contract Documents due to coordination and actual field conditions, including RFIs.

6.2.7 A/E shall be responsible for updating the Record Documents for any addenda, Change Orders, A/E supplemental instructions and any other alterations to the Contract Documents generated by A/E or Owner.

Article 7. Construction Safety

7.1 General. It is the duty and responsibility of Contractor and all of its Subcontractors to be familiar with, enforce and comply with all requirements of Public Law No. 91-596, 29 U.S.C. § 651 et. seq., the Occupational Safety and Health Act of 1970, (OSHA) and all amendments thereto. Contractor shall prepare a safety plan specific to the Project and submit it to ODR and A/E prior to commencing Work. In addition, Contractor and all of its Subcontractors shall comply with all applicable laws and regulations of any public body having jurisdiction for safety of persons or property to protect them from damage, injury or loss and erect and maintain all necessary safeguards for such safety and protection.

7.2 Notices. Contractor shall provide notices as follows:

DocuSign Envelope ID: 4D7A9C98-4F30-4D1D-907E-9A92F807637B

7.2.1 Notify owners of adjacent property including those that own or operate utility services and/or underground facilities, and utility owners, when prosecution of the Work may affect them or their facilities, and cooperate with them in the protection, removal, relocation and replacement, and access to their facilities and/or utilities.

7.2.2 Coordinate the exchange of material safety data sheets (MSDSs) or other hazard communication information required to be made available to or exchanged between or among employers at the site in connection with laws and regulations. Maintain a complete file of MSDSs for all materials in use on site throughout the construction phase and make such file available to Owner and its agents as requested.

7.3 Emergencies. In any emergency affecting the safety of persons or property, Contractor shall act to minimize, mitigate, and prevent threatened damage, injury or loss.

7.3.1 Have authorized agents of Contractor respond immediately upon call at any time of day or night when circumstances warrant the presence of Contractor to protect the Work or adjacent property from damage or to take such action pertaining to the Work as may be necessary to provide for the safety of the public.

7.3.2 Give ODR and A/E prompt notice of all such events.

7.3.3 If Contractor believes that any changes in the Work or variations from Contract Documents have been caused by its emergency response, promptly notify Owner within seventy-two (72) hours of the emergency response event.

7.3.4 Should Contractor fail to respond, Owner is authorized to direct other forces to take action as necessary and Owner may deduct any cost of remedial action from funds otherwise due Contractor.

7.4 Injuries. In the event of an incident or accident involving outside medical care for an individual on or near the Work, Contractor shall notify ODR and other parties as may be directed promptly, but no later than twenty-four (24) hours after Contractor learns that an event required medical care.

7.4.1 Record the location of the event and the circumstances surrounding it, by using photography or other means, and gather witness statements and other documentation which describes the event.

7.4.2 Supply ODR and A/E with an incident report no later than thirty-six (36) hours after the occurrence of the event. In the event of a catastrophic incident (one (1) fatality or three (3) workers hospitalized), barricade and leave intact the scene of the incident until all investigations are complete. A full set of incident investigation documents, including facts, finding of cause, and remedial plans shall be provided within one (1) week after occurrence, unless otherwise directed by legal counsel. Contractor shall provide ODR with

DocuSign Envelope ID: 4D7A9C98-4F30-4D1D-907E-9A92F807637B

written notification within one week of such catastrophic event if legal counsel delays submission of full report.

7.5 Environmental Safety. Upon encountering any previously unknown potentially hazardous material, or other materials potentially contaminated by hazardous material, Contractor shall immediately stop work activities impacted by the discovery, secure the affected area, and notify ODR immediately.

7.5.1 Bind all Subcontractors to the same duty.

7.5.2 Upon receiving such notice, ODR will promptly engage qualified experts to make such investigations and conduct such tests as may be reasonably necessary to determine the existence or extent of any environmental hazard. Upon completion of this investigation, ODR will issue a written report to Contractor identifying the material(s) found and indicate any necessary steps to be taken to treat, handle, transport or dispose of the material.

7.5.3 Owner may hire third-party Contractors to perform any or all such steps.

7.5.4 Should compliance with ODR's instructions result in an increase in Contractor's cost of performance, or delay the Work, Owner will make an equitable adjustment to the Contract Sum and/or the time of completion, and modify the Contract in writing accordingly.

7.6 Trenching Plan. When the project requires excavation which either exceeds a depth of four (4) feet, or results in any worker's upper body being positioned below grade level, Contractor is required to submit a trenching plan to ODR prior to commencing trenching operations unless an engineered plan is part of the Contract Documents. The plan is required to be prepared and sealed by a professional engineer registered in the State of Texas, and hired or employed by Contractor or Subcontractor to perform the work. Said engineer cannot be anyone who is otherwise either directly or indirectly engaged on this project.

Article 8. Quality Control

8.1 Materials & Workmanship. Contractor shall execute Work in a good and workmanlike matter in accordance with the Contract Documents. Contractor shall develop and provide a quality control plan specific to this Project and acceptable to Owner. Where Contract Documents do not specify quality standards, complete and construct all Work in compliance with generally accepted construction industry standards. Unless otherwise specified, incorporate all new materials and equipment into the Work under the Contract.

8.2 Testing.

8.2.1 Owner is responsible for coordinating and paying for routine and special tests required to confirm compliance with quality and performance requirements, except as stated below or otherwise required by the Contract Documents. Contractor shall provide the following testing:

DocuSign Envelope ID: 4D7A9C98-4F30-4D1D-907E-9A92F807637B

8.2.1.1 Any test of basic material or fabricated equipment included as part of a submittal for a required item in order to establish compliance with the Contract Documents.

8.2.1.2 Any test of basic material or fabricated equipment offered as a substitute for a specified item on which a test may be required in order to establish compliance with the Contract Documents.

8.2.1.3 Preliminary, start-up, pre-functional and operational testing of building equipment and systems as necessary to confirm operational compliance with requirements of the Contract Documents.

8.2.1.4 All subsequent tests on original or replaced materials conducted as a result of prior testing failure.

8.2.2 All testing shall be performed in accordance with standard test procedures by an accredited laboratory, or special consultant as appropriate, acceptable to Owner. Results of all tests shall be provided promptly to ODR, A/E, and Contractor.

8.2.3 Non-Compliance (Test Results). Should any of the tests indicate that a material and/or system does not comply with the Contract requirements, the burden of proof remains with Contractor, subject to:

8.2.3.1 Contractor selection and submission of the laboratory for Owner acceptance.

8.2.3.2 Acceptance by Owner of the quality and nature of tests.

8.2.3.3 All tests taken in the presence of A/E and/or ODR, or their representatives.

8.2.3.4 If tests confirm that the material/systems comply with Contract Documents, Owner will pay the cost of the test.

8.2.3.5 If tests reveal noncompliance, Contractor will pay those laboratory fees and costs of that particular test and all future tests, of that failing Work, necessary to eventually confirm compliance with Contract Documents.

8.2.3.6 Proof of noncompliance with the Contract Documents will make Contractor liable for any corrective action which ODR determines appropriate, including complete removal and replacement of non-compliant work or material.

8.2.4 Notice of Testing. Contractor shall give ODR and A/E timely notice of its readiness and the date arranged so ODR and A/E may observe such inspection, testing, or approval.

DocuSign Envelope ID: 4D7A9C98-4F30-4D1D-907E-9A92F807637B

8.2.5 Test Samples. Contractor is responsible for providing Samples of sufficient size for test purposes and for coordinating such tests with their Work Progress Schedule to avoid delay.

8.2.6 Covering Up Work. If Contractor covers up any Work without providing Owner an opportunity to inspect, Contractor shall, if requested by ODR, uncover and recover the work at Contractor's expense.

8.3 Submittals.

8.3.1 Contractor's Submittals. Contractor shall submit with reasonable promptness consistent with the Project schedule and in orderly sequence all Shop Drawings, Samples, or other information required by the Contract Documents, or subsequently required by Change Order. Prior to submitting, Contractor shall review each submittal for general compliance with Contract Documents and approve submittals for review by A/E and Owner by an approval stamp affixed to each copy. Submittal data presented without Contractor's stamp will be returned without review or comment, and any delay resulting from failure is Contractor's responsibility.

8.3.1.1 Contractor shall within twenty-one (21) days of the effective date of the Notice To Proceed with construction, submit to ODR and A/E, a submittal schedule/register, organized by specification section, listing all items to be furnished for review and approval by A/E and Owner. The list shall include Shop Drawings, manufacturer's literature, certificates of compliance, materials Samples, materials colors, guarantees, and all other items identified throughout the Specifications.

8.3.1.2 Contractor shall indicate the type of item, Contract requirements reference, and Contractor's scheduled dates for submitting the item along with the requested dates for approval answers from A/E and Owner. The submittal register shall indicate the projected dates for procurement of all included items and shall be updated at least monthly with actual approval and procurement dates. Contractor's Submittal Register must be reasonable in terms of the review time for complex submittals. Contractor's submittal schedule must be consistent with the Work Progress Schedule and identify critical submittals. Show and allow a minimum of fifteen (15) calendar days duration after receipt by A/E and ODR for review and approval. If resubmittal required, allow a minimum of an additional fifteen (15) calendar days for review. Submit the updated Submittal Register with each request for progress payment. Owner may establish routine review procedures and schedules for submittals at the preconstruction conference and/or elsewhere in the Contract Documents. If Contractor fails to update and provide the Submittal Register as required, Owner may, after seven (7) days notice to Contractor withhold a reasonable sum of money that would otherwise be due Contractor.

DocuSign Envelope ID: 4D7A9C98-4F30-4D1D-907E-9A92F807637B

8.3.1.3 Contractor shall coordinate the Submittal Register with the Work Progress Schedule. Do not schedule Work requiring a submittal to begin prior to scheduling review and approval of the related submittal. Revise and/or update both schedules monthly to ensure consistency and current project data. Provide to ODR the updated Submittal Register and schedule with each application for progress payment. Refer to requirements for the Work Progress Schedule for inclusion of procurement activities therein. Regardless, the Submittal Register shall identify dates submitted and returned and shall be used to confirm status and disposition of particular items submitted, including approval or other action taken and other information not conveniently tracked through the Work Progress Schedule.

8.3.1.4 By submitting Shop Drawings, Samples or other required information, Contractor represents that it has determined and verified all applicable field measurements, field construction criteria, materials, catalog numbers and similar data to the extent possible from existing conditions and design information provided by A/E prior to fabrication; and has checked and coordinated each Shop Drawing and Sample with the requirements of the Work and the Contract Documents.

8.3.2 Review of Submittals. A/E and ODR review is only for conformance with the design concept and the information provided in the Contract Documents. Responses to submittals will be in writing. The approval of a separate item does not indicate approval of an assembly in which the item functions. The approval of a submittal does not relieve Contractor of responsibility for any deviation from the requirements of the Contract unless Contractor informs A/E and ODR of such deviation in a clear, conspicuous, and written manner on the submittal transmittal and at the time of submission, and obtains Owner's written specific approval of the particular deviation.

8.3.3 Correction and Resubmission. Contractor shall make any corrections required to a submittal and resubmit the required number of corrected copies promptly so as to avoid delay, until submittal approval. Direct attention in writing to A/E and ODR, when applicable, to any new revisions other than the corrections requested on previous submissions.

8.3.4 Limits on Shop Drawing Review. Contractor shall not commence any Work requiring a submittal until review of the submittal under Subsection 8.3.2. Construct all such work in accordance with reviewed submittals. Comments incorporated as part of the review in Subsection 8.3.2 of Shop Drawings and Samples is not authorization to Contractor to perform extra work or changed work unless authorized through a Change Order. A/E's and ODR's review, if any, does not relieve Contractor from responsibility for defects in the Work resulting from errors or omissions of any kind on the submittal, regardless of any approval action. A/E or ODR shall not make formal changes to the Contract Documents via the submittal process. Changes

DocuSign Envelope ID: 4D7A9C98-4F30-4D1D-907E-9A92F807637B

to the Construction Documents shall be accomplished via Section 3.2.2 and Article 11 Changes.

8.3.5 No Substitutions Without Approval. ODR and A/E may receive and consider Contractor's request for substitution when Contractor agrees to reimburse Owner for review costs and satisfies the requirements of this section. If Contractor does not satisfy these conditions, ODR and A/E will return the request without action except to record noncompliance with these requirements. Owner will not consider the request if Contractor cannot provide the product or method because of failure to pursue the Work promptly or coordinate activities properly. Contractor's request for a substitution may be considered by ODR and A/E when:

8.3.5.1 The Contract Documents do not require extensive revisions; and

8.3.5.2 Proposed changes are in keeping with the general intent of the Contract Documents and the design intent of A/E and do not result in an increase in cost to Owner; and

8.3.5.3 The request is timely, fully documented, properly submitted and one or more of the following apply:

8.3.5.3.1 Contractor cannot provide the specified product, assembly or method of construction within the Contract Time;

8.3.5.3.2 The request directly relates to an "or-equal" clause or similar language in the Contract Documents;

8.3.5.3.3 The request directly relates to a "product design standard" or "performance standard" clause in the Contract Documents;

8.3.5.3.4 The requested substitution offers Owner a substantial advantage in cost, time, energy conservation or other considerations, after deducting additional responsibilities Owner must assume;

8.3.5.3.5 The specified product or method of construction cannot receive necessary approval by an authority having jurisdiction, and ODR can approve the requested substitution;

8.3.5.3.6 Contractor cannot provide the specified product, assembly or method of construction in a manner that is compatible with other materials and where Contractor certifies that the substitution will overcome the incompatibility;

DocuSign Envelope ID: 4D7A9C98-4F30-4D1D-907E-9A92F807637B

8.3.5.3.7 Contractor cannot coordinate the specified product, assembly or method of construction with other materials and where Contractor certifies they can coordinate the proposed substitution; or

8.3.5.3.8 The specified product, assembly or method of construction cannot provide a warranty required by the Contract Documents and where Contractor certifies that the proposed substitution provides the required warranty.

8.3.5.3.9 The manufacture of the specified product has been removed from production due to cancellation or obsolescence.

8.3.6 Unauthorized Substitutions at Contractor's Risk. Contractor is financially responsible for any additional costs or delays resulting from unauthorized substitution of materials, equipment or fixtures other than those specified. Contractor shall reimburse Owner for any increased design or contract administration costs resulting from such unauthorized substitutions.

8.4 Field Mock-up.

8.4.1 Mock-ups shall be constructed prior to commencement of a specified scope of work to confirm acceptable workmanship.

8.4.1.1 As a minimum, field mock-ups shall be constructed for roofing systems, exterior veneer / finish systems, glazing systems, and any other Work requiring a mock-up as identified throughout the Contract Documents. Mock-ups for systems not part of the Project scope shall not be required.

8.4.1.2 Mock-ups may be incorporated into the Work if allowed by the Contract Documents and if acceptable to ODR. If mock-ups are freestanding, they shall remain in place until otherwise directed by Owner.

8.4.1.3 Contractor shall include field mock-ups in their Work Progress Schedule and shall notify ODR and A/E of readiness for review sufficiently in advance to coordinate review without delay.

8.5 Inspection During Construction.

8.5.1 Contractor shall provide sufficient, safe, and proper facilities, including equipment as necessary for safe access, at all reasonable times for observation and/or inspection of the Work by Owner and its agents. "Reasonable times" of inspection allow for sufficient monitoring of the quality of materials and installation without substantially impeding the progress of the Work.

DocuSign Envelope ID: 4D7A9C98-4F30-4D1D-907E-9A92F807637B

8.5.2 Contractor shall not cover up any Work with finishing materials or other building components prior to providing Owner and its agents an opportunity to perform an inspection of the Work.

8.5.2.1 Should corrections of the Work be required for approval, Contractor shall not cover-up corrected Work until Owner indicates approval.

8.5.2.2 Contractor shall provide notification of at least five (5) working days or otherwise as mutually agreed, to ODR of the anticipated need for a cover-up inspection. Should ODR fail to make the necessary inspection within the agreed period, Contractor may proceed with cover-up Work, but is not relieved of responsibility for Work to comply with requirements of the Contract Documents.

Article 9. Construction Schedules

9.1 Contract Time. **TIME IS AN ESSENTIAL ELEMENT OF THE CONTRACT**. The Contract Time is the time between the dates indicated in the Notice to Proceed for commencement of the Work and for achieving Substantial Completion. The Contract Time can be modified only by Change Order. Failure to achieve Substantial Completion within the Contract Time as otherwise agreed to in writing will cause damage to Owner and may subject Contractor to liquidated damages as provided in the Contract Documents. If Contractor fails to achieve Final Completion within thirty (30) calendar days after Substantial Completion or a mutually agreed upon longer period of time between Contractor and Owner, Contractor shall be responsible for Owner's additional inspection, project management, and maintenance cost to the extent caused by Contractor's failure to achieve Final Completion.

9.2 Notice to Proceed. Owner will issue a Notice to Proceed which shall state the dates for beginning Work and for achieving Substantial Completion of the Work.

9.3 Work Progress Schedule. Refer to Supplementary General Conditions or Special Conditions for additional schedule requirements. Unless indicated otherwise in those documents, Contractor shall submit their initial Work Progress Schedule for the Work in relation to the entire Project not later than twenty-one (21) days after the effective date of the Notice to Proceed to ODR and A/E. Unless otherwise indicated in the Contract Documents, the Work Progress Schedule shall be computerized Critical Path Method (CPM) with fully editable logic. This initial schedule shall indicate the dates for starting and completing the various aspects required to complete the Work, including mobilization, procurement, installation, testing, inspection, delivery of Close-out Documents and acceptance of all the Work of the Contract. When acceptable to Owner, the initially accepted schedule shall be the Baseline Schedule for comparison to actual conditions throughout the Contract duration.

9.3.1 Schedule Requirements. Contractor shall submit electronic and paper copy of the initial Work Progress Schedule reflecting accurate and reliable representations of the planned progress of the Work, the Work to date if any, and of Contractor's actual plans for its completion. Contractor shall organize

DocuSign Envelope ID: 4D7A9C98-4F30-4D1D-907E-9A92F807637B

and provide adequate detail so the schedule is capable of measuring and forecasting the effect of delaying events on completed and uncompleted activities.

9.3.1.1 Contractor shall resubmit initial schedule as required to address review comments from A/E and ODR until such schedule is accepted as the Baseline Schedule.

9.3.1.2 Submittal of a schedule, schedule revision or schedule update constitutes Contractor's representation to Owner of the accurate depiction of all progress to date and that Contractor will follow the schedule as submitted in performing the Work.

9.3.2 Schedule Updates. Contractor shall update the Work Progress Schedule and the Submittal Register monthly, as a minimum, to reflect progress to date and current plans for completing the Work, while maintaining original schedule as Baseline Schedule and submit paper and electronic copies of the update to A/E and ODR as directed, but as a minimum with each request for payment. Owner has no duty to make progress payments unless accompanied by the updated Work Progress Schedule. Show the anticipated date of completion reflecting all extensions of time granted through Change Order as of the date of the update. Contractor may revise the Work Progress Schedule when in Contractor's judgment it becomes necessary for the management of the Work. Contractor shall identify all proposed changes to schedule logic to Owner and to A/E via an executive summary accompanying the updated schedule for review prior to final implementation of revisions into a revised Baseline Schedule. Schedule changes that materially impact Owner's operations shall be communicated promptly to ODR and shall not be incorporated into the revised Baseline Schedule without ODR's consent.

9.3.3 The Work Progress Schedule is for Contractor's use in managing the Work and submittal of the schedule, and successive updates or revisions, is for the information of Owner and to demonstrate that Contractor has complied with requirements for planning the Work. Owner's acceptance of a schedule, schedule update or revision constitutes Owner's agreement to coordinate its own activities with Contractor's activities as shown on the schedule.

9.3.3.1 Acceptance of the Work Progress Schedule, or update and/or revision thereto does not indicate any approval of Contractor's proposed sequences and duration.

9.3.3.2 Acceptance of a Work Progress Schedule update or revision indicating early or late completion does not constitute Owner's consent, alter the terms of the Contract, or waive either Contractor's responsibility for timely completion or Owner's right to damages for Contractor's failure to do so.

9.3.3.3 Contractor's scheduled dates for completion of any activity or the entire Work do not constitute a change in terms of the Contract.

DocuSign Envelope ID: 4D7A9C98-4F30-4D1D-907E-9A92F807637B

Change Orders are the only method of modifying the Substantial Completion Date(s) and Contract Time.

9.4 Ownership of Float. Unless indicated otherwise in the Contract Documents, Contractor shall develop its schedule, pricing, and execution plan to provide a minimum of ten (10) percent total float at acceptance of the Baseline Schedule. Float time contained in the Work Progress Schedule is not for the exclusive benefit of Contractor or Owner, but belongs to the Project and may be consumed by either party as needed on a first-used basis.

9.5 Completion of Work. Contractor is accountable for completing the Work within the Contract Time stated in the Contract, or as otherwise amended by Change Order.

9.5.1 If, in the judgment of Owner, the work is behind schedule and the rate of placement of work is inadequate to regain scheduled progress to insure timely completion of the entire work or a separable portion thereof, Contractor, when so informed by Owner, shall immediately take action to increase the rate of work placement by:

9.5.1.1 An increase in working forces.

9.5.1.2 An increase in equipment or tools.

9.5.1.3 An increase in hours of work or number of shifts.

9.5.1.4 Expedite delivery of materials.

9.5.1.5 Other action proposed if acceptable to Owner.

9.5.2 Within ten (10) days after such notice from ODR, Contractor shall notify ODR in writing of the specific measures taken and/or planned to increase the rate of progress. Contactor shall include an estimate as to the date of scheduled progress recovery and an updated Work Progress Schedule illustrating Contractor's plan for achieving timely completion of the Project. Should ODR deem the plan of action inadequate, Contractor shall take additional steps or make adjustments as necessary to its plan of action until it meets with ODR's approval.

9.6 Modification of the Contract Time.

9.6.1 Delays and extension of time as hereinafter described are valid only if executed in accordance with provisions set forth in Article 11.

9.6.2 When a delay defined herein as excusable prevents Contractor from completing the Work within the Contract Time, Contractor is entitled to an extension of time. Owner will make an equitable adjustment and extend the number of days lost because of excusable delay or Weather Days, as measured by Contractor's progress schedule. All extensions of time will be granted in calendar days. In no event, however, will an extension of time be granted for

DocuSign Envelope ID: 4D7A9C98-4F30-4D1D-907E-9A92F807637B

delays that merely extend the duration of non-critical activities, or which only consume float without delaying the project Substantial Completion date(s).

9.6.2.1 A "Weather Day" is a day on which Contractor's current schedule indicates Work is to be done, and on which inclement weather and/or related site conditions prevent Contractor from performing seven (7) continuous hours of Work on the critical path between the hours of 7:00 a.m. and 6:00 p.m. Weather days are excusable delays. When weather conditions at the site prevent work from proceeding, Contractor shall immediately notify ODR for confirmation of the conditions. At the end of each calendar month, submit to ODR and A/E a list of Weather Days occurring in that month along with documentation of the impact on critical activities. Based on confirmation by ODR, any time extension granted will be issued by Change Order. If Contractor and Owner cannot agree on the time extension, Owner may issue a ULCO for fair and reasonable time extension.

9.6.2.2 Excusable Delay. Contractor is entitled to an equitable adjustment of the Contract Time, issued via change order, for delays caused by the following:

9.6.2.2.1 Errors, omissions and imperfections in design, which A/E corrects by means of changes in the Drawings and Specifications.

9.6.2.2.2 Unanticipated physical conditions at the Site, which A/E corrects by means of changes to the Drawings and Specifications or for which ODR directs changes in the Work identified in the Contract Documents.

9.6.2.2.3 Failure of Owner to have secured property, right-of-way or easements necessary for Work to begin or progress.

9.6.2.2.4 Changes in the Work that effect activities identified in Contractor's schedule as "critical" to completion of the entire Work, if such changes are ordered by ODR or recommended by A/E and ordered by ODR.

9.6.2.2.5 Suspension of Work for unexpected natural events, Force Majeure (sometimes called "acts of God"), civil unrest, strikes or other events which are not within the reasonable control of Contractor.

9.6.2.2.6 Suspension of Work for convenience of ODR, which prevents Contractor from completing the Work within the Contract Time.

DocuSign Envelope ID: 4D7A9C98-4F30-4D1D-907E-9A92F807637B

9.6.2.2.7 Administrative delays caused by activities or approval requirements related to an Authority Having Jurisdiction.

9.6.3 Contractor's relief in the event of such delays is the time impact to the critical path as determined by analysis of Contractor's schedule. In the event that Contractor incurs additional direct costs because of the excusable delays other than described in Subparagraph 9.6.2.2.4 and within the reasonable control of Owner, the Contract price and Contract Time are to be equitably adjusted by Owner pursuant to the provisions of Article 11.

9.7 No Damages for Delay. Contractor has no claim for monetary damages for delay or hindrances to the work from any cause, including without limitation any act or omission of Owner.

9.8 Concurrent Delay. When the completion of the Work is simultaneously delayed by an excusable delay and a delay arising from a cause not designated as excusable, Contractor may not be entitled to a time extension for the period of concurrent delay.

9.9 Other Time Extension Requests. Time extensions requested in association with changes to the Work directed or requested by Owner shall be included with Contractor's proposed costs for such change. Time extensions requested for inclement weather are covered by Paragraph 9.6.2.1 above. If Contractor believes that the completion of the Work is delayed by a circumstance other than for changes directed to the Work or weather, they shall give ODR written notice, stating the nature of the delay and the activities potentially affected, within five (5) days after the onset of the event or circumstance giving rise to the excusable delay. Contractor shall provide sufficient written evidence to document the delay. In the case of a continuing cause of delay, only one claim is necessary. State claims for extensions of time in numbers of whole or half days.

9.9.1 Within ten (10) days after the cessation of the delay, Contractor shall formalize its request for extension of time in writing to include a full analysis of the schedule impact of the delay and substantiation of the excusable nature of the delay. All changes to the Contract Time or made as a result of such claims is by Change Order, as set forth in Article 11.

9.9.2 No extension of time releases Contractor or the Surety furnishing a performance or payment bond from any obligations under the Contract or such a bond. Those obligations remain in full force until the discharge of the Contract.

9.9.3 Contents of Time Extension Requests. Contractor shall provide with each Time Extension Request a quantitative demonstration of the impact of the delay on project completion time, based on the Work Progress Schedule. Contractor shall include with Time Extension Requests a reasonably detailed narrative setting forth:

DocuSign Envelope ID: 4D7A9C98-4F30-4D1D-907E-9A92F807637B

9.9.3.1 The nature of the delay and its cause; the basis of Contractor's claim of entitlement to a time extension.

9.9.3.2 Documentation of the actual impacts of the claimed delay on the critical path indicated in Contractor's Work Progress Schedule, and any concurrent delays.

9.9.3.3 Description and documentation of steps taken by Contractor to mitigate the effect of the claimed delay, including, when appropriate, the modification of the Work Progress Schedule.

9.9.4 Owner's Response. Owner will respond to the Time Extension Request by providing to Contractor written notice of the number of days granted, if any, and giving its reason if this number differs from the number of days requested by Contractor.

9.9.4.1 Owner will not grant time extensions for delays that do not affect the Contract Substantial Completion date.

9.9.4.2 Owner will respond to each properly submitted Time Extension Request within fifteen (15) days following receipt. If Owner cannot reasonably make a determination about Contractor's entitlement to a time extension within that time, Owner will notify Contractor in writing. Unless otherwise agreed by Contractor, Owner has no more than fifteen (15) additional days to prepare a final response. If Owner fails to respond within forty-five (45) days from the date the Time Extension Request is received, Contractor is entitled to a time extension in the amount requested.

9.10 Failure to Complete Work Within the Contract Time. **TIME IS AN ESSENTIAL ELEMENT OF THE CONTRACT.** Contractor's failure to substantially complete the Work within the Contract Time or to achieve Substantial Completion as required will cause damage to Owner. These damages shall be liquidated by agreement of Contractor and Owner, in the amount per day as set forth in the Contract Documents.

9.11 Liquidated Damages. Owner may collect liquidated damages due from Contractor directly or indirectly by reducing the Contract Sum in the amount of liquidated damages stated in the Supplementary General Conditions or Special Conditions.

Article 10. Payments

10.1 Schedule of Values. Contractor shall submit to ODR and A/E for acceptance a Schedule of Values accurately itemizing material and labor for the various classifications of the Work based on the organization of the specification sections and of sufficient detail acceptable to ODR. The accepted Schedule of Values will be the basis for the progress payments under the Contract.

DocuSign Envelope ID: 4D7A9C98-4F30-4D1D-907E-9A92F807637B

10.1.1 No progress payments will be made prior to receipt and acceptance of the Schedule of Values, provided in such detail as required by ODR, and submitted not less than twenty-one (21) days prior to the first request for payment. The Schedule of Values shall follow the order of trade divisions of the Specifications and include itemized costs for general conditions, costs for preparing close out documents, fees, contingencies, and Owner cash allowances, if applicable, so that the sum of the items will equal the Contract price. As appropriate, assign each item labor and/or material values, the subtotal thereof equaling the value of the work in place when complete.

10.1.1.1 Owner requires that the Work items be inclusive of the cost of the Work items only. Any contract markups for overhead and profit, general conditions, etc., shall be contained within separate line items for those specific purposes which shall be divided into at least two(2) lines, one (1) for labor and one (1) for materials.

10.1.2 Contractor shall retain a copy of all worksheets used in preparation of its bid or proposal, supported by a notarized statement that the worksheets are true and complete copies of the documents used to prepare the bid or proposal. Make the worksheets available to ODR at the time of Contract execution. Thereafter Contractor shall grant Owner during normal business hours access to said copy of worksheets at any time during the period commencing upon execution of the Contract and ending one year after final payment.

10.2. Progress Payments. Contractor will receive periodic progress payments for Work performed, materials in place, suitably stored on Site, or as otherwise agreed to by Owner and Contractor. Payment is not due until receipt by ODR or his designee of a correct and complete Pay Application in electronic and/or hard copy format as set forth in Supplementary General Conditions, Special Conditions, and certified by A/E. Progress payments are made provisionally and do not constitute acceptance of work not in accordance with the Contract Documents. Owner will not process progress payment applications for Change Order Work until all parties execute the Change Order.

10.2.1 Preliminary Pay Worksheet. Once each month that a progress payment is to be requested, the Contractor shall submit to A/E and ODR a complete, clean copy of a preliminary pay worksheet or preliminary pay application, to include the following:

10.2.1.1 Contractor's estimate of the amount of Work performed, labor furnished and materials incorporated into the Work, using the established Schedule of Values;

10.2.1.2 An updated Work Progress Schedule including the executive summary and all required schedule reports;

10.2.1.3 HUB subcontracting plan Progress Assessment Report as required in Paragraph 4.2.5.1;

DocuSign Envelope ID: 4D7A9C98-4F30-4D1D-907E-9A92F807637B

10.2.1.4 Such additional documentation as Owner may require as set forth in the Supplementary General Conditions or elsewhere in the Contract Documents; and

10.2.1.5 Construction payment affidavit.

10.2.2 Contractor's Application for Payment. As soon as practicable, but in no event later than seven (7) days after receipt of the preliminary pay worksheet, A/E and ODR will meet with Contractor to review the preliminary pay worksheet and to observe the condition of the Work. Based on this review, ODR and A/E may require modifications to the preliminary pay worksheet prior to the submittal of an Application for Payment, and will promptly notify Contractor of revisions necessary for approval. As soon as practicable, Contractor shall submit its Application for Payment on the appropriate and completed form, reflecting the required modifications to the Schedule of Values required by A/E and/or ODR. Attach all additional documentation required by ODR and/or A/E, as well as an affidavit affirming that all payrolls, bills for labor, materials, equipment, subcontracted work and other indebtedness connected with Contractor's Application for Payment are paid or will be paid within the time specified in Tex. Gov't Code, Ch. 2251. No Application for Payment is complete unless it fully reflects all required modifications, and attaches all required documentation including Contractor's affidavit.

10.2.3 Certification by Architect/Engineer. Within five (5) days or earlier following A/E's receipt of Contractor's formal Application for Payment, A/E will review the Application for Payment for completeness, and forward it to ODR. A/E will certify that the application is complete and payable, or that it is incomplete, stating in particular what is missing. If the Application for Payment is incomplete, Contractor shall make the required corrections and resubmit the Application for Payment for processing.

10.3 Owner's Duty to Pay. Owner has no duty to pay the Contractor except on receipt by ODR of: 1) a complete Application for Payment certified by A/E; 2) Contractor's updated Work Progress Schedule; and 3) confirmation that Contractor's record documentation at the Site is kept current.

10.3.1 Payment for stored materials and/or equipment confirmed by Owner and A/E to be on-site or otherwise properly stored is limited to eighty-five (85) percent of the invoice price or eighty-five (85) percent of the scheduled value for the materials or equipment, whichever is less.

10.3.2 Retainage. Owner will withhold from each progress payment, as retainage, five (5) percent of the total earned amount, the amount authorized by law, or as otherwise set forth in the Supplementary General Conditions or Special Conditions. Retainage is managed in conformance with Tex. Gov't Code, Ch. 2252, Subch. B.

DocuSign Envelope ID: 4D7A9C98-4F30-4D1D-907E-9A92F807637B

10.3.2.1 Contractor shall provide written consent of its surety for any request for reduction or release of retainage.

10.3.2.2 At least sixty-five (65) percent of the Contract, or such other discrete Work phase as set forth in Subsection 12.1.6 or Work package delineated in the Contract Documents, must be completed before Owner can consider a retainage reduction or release.

10.3.2.3 Contractor shall not withhold retainage from their Subcontractors and suppliers in amounts that are any percentage greater than that withheld in its Contract with Owner under this subsection, unless otherwise acceptable to Owner.

10.3.3 Price Reduction to Cover Loss. Owner may reduce any Application for Payment, prior to payment to the extent necessary to protect Owner from loss on account of actions of Contractor including, but not limited to, the following:

10.3.3.1 Defective or incomplete Work not remedied;

10.3.3.2 Damage to Work of a separate Contractor;

10.3.3.3 Failure to maintain scheduled progress or reasonable evidence that the Work will not be completed within the Contract Time;

10.3.3.4 Persistent failure to carry out the Work in accordance with the Contract Documents;

10.3.3.5 Reasonable evidence that the Work cannot be completed for the unpaid portion of the Contract Sum;

10.3.3.6 Assessment of fines for violations of prevailing wage rate law; or

10.3.3.7 Failure to include the appropriate amount of retainage for that periodic progress payment.

10.3.4 Title to all material and Work covered by progress payments transfers to Owner upon payment.

10.3.4.1 Transfer of title to Owner does not relieve Contractor and its Subcontractors of the sole responsibility for the care and protection of materials and Work upon which payments have been made until substantial completion, responsibility for the care and protection of materials and Work in areas where punch list items are completed until final completion or the restoration of any damaged Work, or waive the right of Owner to require the fulfillment of all the terms of the Contract.

DocuSign Envelope ID: 4D7A9C98-4F30-4D1D-907E-9A92F807637B

10.4 Progress Payments. Progress payments to Contractor do not release Contractor or its surety from any obligations under the Contract.

10.4.1 Upon Owner's request, Contractor shall furnish manifest proof of the status of Subcontractor's accounts in a form acceptable to Owner.

10.4.2 Pay estimate certificates must be signed by a corporate officer or a representative duly authorized by Contractor.

10.4.3 Provide copies of bills of lading, invoices, delivery receipts or other evidence of the location and value of such materials in requesting payment for materials.

10.4.4 For purposes of Tex. Gov't Code § 2251.021(a)(2), the date the performance of service is complete is the date when ODR approves the Application for Payment.

10.5 Off-Site Storage. With prior approval by Owner and in the event Contractor elects to store materials at an off-site location, abide by the following conditions, unless otherwise agreed to in writing by Owner.

10.5.1 Store materials in a commercial warehouse meeting the criteria stated below.

10.5.2 Provide insurance coverage adequate not only to cover materials while in storage, but also in transit from the off-site storage areas to the Project Site. Copies of duly authenticated certificates of insurance, made out to insure the State agency which is signatory to the Contract, must be filed with Owner's representative.

10.5.3 Inspection by Owner's representative is allowed at any time. Owner's inspectors must be satisfied with the security, control, maintenance, and preservation measures.

10.5.4 Materials for this Project are physically separated and marked for the Project in a sectioned-off area. Only materials which have been approved through the submittal process are to be considered for payment.

10.5.5 Owner reserves the right to reject materials at any time prior to final acceptance of the complete Contract if they do not meet Contract requirements regardless of any previous progress payment made.

10.5.6 With each monthly payment estimate, submit a report to ODR and A/E listing the quantities of materials already paid for and still stored in the off-site location.

10.5.7 Make warehouse records, receipts and invoices available to Owner's representatives, upon request, to verify the quantities and their disposition.

DocuSign Envelope ID: 4D7A9C98-4F30-4D1D-907E-9A92F807637B

10.5.8 In the event of Contract termination or default by Contractor, the items in storage off-site, upon which payment has been made, will be promptly turned over to Owner or Owner's agents at a location near the jobsite as directed by ODR. The full provisions of performance and payment bonds on this Project cover the materials off-site in every respect as though they were stored on the Project Site.

10.6 Time for Payment by Contractor Pursuant to Tex. Gov't Code § 2251.022.

10.6.1 Contractor who receives a payment from a governmental entity shall pay Subcontractor the appropriate share of the payment not later than the tenth (10th) day after the date Contractor receives the payment.

10.6.2 The appropriate share is overdue on the eleventh (11th) day after the date Conrtactor receives the payment.

Article 11. Changes

11.1 Change Orders. A Change Order issued after execution of the Contract is a written order to Contractor, signed by ODR, Contractor, and A/E, authorizing a change in the Work or an adjustment in the Contract Sum or the Contract Time. The Contract Sum and the Contract Time can only be changed by Change Order. A Change Order signed by Contractor indicates his agreement therewith, including the adjustment in the Contract Sum and/or the Contract Time. ODR may issue a written authorization for Contractor to proceed with Work of a Change Order in advance of final execution by all parties in accordance with Section 11.9.

11.1.1 Owner, without invalidating the Contract, may order changes in the Work within the general scope of the Contract consisting of additions, deletions or other revisions, and the Contract Sum and the Contract Time will be adjusted accordingly. All such changes in the Work shall be authorized by Change Order or ULCO, and shall be performed under the applicable conditions of the Contract Documents. If such changes cause an increase or decrease in Contractor's cost of, or time required for, performance of the Contract, an equitable adjustment shall be made and confirmed in writing in a Change Order or a ULCO.

11.1.2 It is recognized by the parties hereto and agreed by them that the Specifications and Drawings may not be complete or free from errors, omissions and imperfections or that they may require changes or additions in order for the Work to be completed to the satisfaction of Owner and that, accordingly, it is the express intention of the parties, notwithstanding any other provisions in this Contract, that any errors, omissions or imperfections in such Specifications and Drawings, or any changes in or additions to same or to the Work ordered by Owner and any resulting delays in the Work or increases in Contractor's costs and expenses arising out of such errors, shall not constitute or give rise to any claim, demand or cause of action of any nature whatsoever in favor of Contractor, whether for breach of Contract, or otherwise; provided, however, that Owner shall be liable to Contractor for the

DocuSign Envelope ID: 4D7A9C98-4F30-4D1D-907E-9A92F807637B

sum stated to be due Contractor in any Change Order approved and signed by both parties, it being agreed hereby that such sum, together with any extension of time contained in said Change Order, shall constitute full compensation to Contractor for all costs, expenses and damages to Contractor, as permitted under Tex. Gov't Code, Ch. 2260.

11.1.3 Procedures for administration of Change Orders shall be established by Owner and stated in Supplementary General Conditions, Special Conditions, or elsewhere in the Contract Documents.

11.1.4 No verbal order, verbal statement, or verbal direction of Owner or his duly appointed representative shall be treated as a change under this article or entitle Contractor to an adjustment.

11.1.5 Contractor agrees that Owner or any of its duly authorized representatives shall have access and the right to examine any directly pertinent books, documents, papers, and records of Contractor. Further, Contractor agrees to include in all its subcontracts a provision to the effect that Subcontractor agrees that Owner or any of its duly authorized representatives shall have access to and the right to examine any directly pertinent books, documents, papers and records of such Subcontractor relating to any claim arising from the Contract, whether or not the Subcontractor is a party to the claim. The period of access and examination described herein which relates to appeals under the Disputes article of the Contract, litigation, or the settlement of claims arising out of the performance of the Contract shall continue until final disposition of such claims, appeals or litigation.

11.2 Unit Prices. If unit prices are stated in the Contract Documents or subsequently agreed upon, and if the quantities originally contemplated are so changed in a Proposed Change Order that application of the agreed unit prices to the quantities of work proposed will cause substantial inequity to Owner or Contractor, the applicable unit prices shall be equitably adjusted as provided in the Supplementary General Conditions or Special Conditions or as agreed to by the parties and incorporated into a Change Order.

11.3 Claims for Additional Costs.

11.3.1 If Contractor wishes to make a claim for an increase in the Contract Sum not related to a requested change, they shall give Owner and A/E written notice thereof within twenty-one (21) days after the occurrence of the event giving rise to such claim, but, in any case before proceeding to execute the Work considered to be additional cost or time, except in an emergency endangering life or property in which case Contractor shall act in accordance with Subsection 7.2.1. No such claim shall be valid unless so made. If Owner and Contractor cannot agree on the amount of the adjustment in the Contract Sum, it shall be determined as set forth under Article 15. Any change in the Contract Sum resulting from such claim shall be authorized by a Change Order or a ULCO.

DocuSign Envelope ID: 4D7A9C98-4F30-4D1D-907E-9A92F807637B

11.3.2 If Contractor claims that additional cost is involved because of, but not limited to, 1) any written interpretation of the Contract Documents, 2) any order by Owner to stop the Work pursuant to Article 14 where Contractor was not at fault, or 3) any written order for a minor change in the Work issued pursuant to Section 11.4, Contractor shall make such claim as provided in Subsection 11.3.1.

11.3.3 Should Contractor or his Subcontractors fail to call attention of A/E to discrepancies or omissions in the Contract Documents, but claim additional costs for corrective Work after Contract award, Owner may assume intent to circumvent competitive bidding for necessary corrective Work. In such case, Owner may choose to let a separate Contract for the corrective Work, or issue a ULCO to require performance by Contractor. Claims for time extensions or for extra cost resulting from delayed notice of patent Contract Document discrepancies or omissions will not be considered by Owner.

11.4 Minor Changes. A/E, with concurrence of ODR, will have authority to order minor changes in the Work not involving an adjustment in the Contract Sum or an extension of the Contract Time. Such changes shall be effected by written order which Contractor shall carry out promptly and record on as-built record documents.

11.5 Concealed Site Conditions. Contractor is responsible for visiting the Site and being familiar with local conditions such as the location, accessibility, and general character of the Site and/or building. If, in the performance of the Contract, subsurface, latent, or concealed conditions at the Site are found to be materially different from the information included in the Contract Documents, or if unknown conditions of an unusual nature are disclosed differing materially from the conditions usually inherent in Work of the character shown and specified, ODR and A/E shall be notified in writing of such conditions before they are further disturbed or subsequent related work proceeds. Upon such notice, or upon its own observation of such conditions, A/E, with the approval of ODR, will promptly make such changes in the Drawings and Specifications as they deem necessary to conform to the different conditions, and any increase or decrease in the cost of the Work, or in the time within which the Work is to be completed, resulting from such changes will be adjusted by Change Order, subject to the prior approval of ODR.

11.6 Extension of Time. All changes to the Contract Time shall be made as a consequence of requests as required under Section 9.6, and as documented by Change Order as provided under Section 11.1.

11.7 Administration of Change Order Requests. All changes in the Contract shall be administered in accordance with procedures approved by Owner, and when required, make use of such electronic information management system(s) as Owner may employ.

11.7.1 Routine changes in the construction Contract shall be formally initiated by A/E by means of a PCO form detailing requirements of the proposed change for pricing by Contractor. This action may be preceded by communications

DocuSign Envelope ID: 4D7A9C98-4F30-4D1D-907E-9A92F807637B

between Contractor, A/E and ODR concerning the need and nature of the change, but such communications shall not constitute a basis for beginning the proposed Work by Contractor. Except for emergency conditions described below, approval of Contractor's cost proposal by A/E and ODR will be required for authorization to proceed with the Work being changed. Owner will not be responsible for the cost of Work changed without prior approval and Contractor may be required to remove Work so installed.

11.7.2 All proposed costs for change order Work must be supported by itemized accounting of material, equipment and associated itemized installation costs in sufficient detail, following the outline and organization of the establish Schedule of Values, to permit analysis by A/E and ODR using current estimating guides and/or practices. Photocopies of Subcontractor and vendor proposals shall be furnished unless specifically waived by ODR. Contractor shall provide written response to a change request within twenty-one (21) days of receipt.

11.7.3 Any unexpected circumstance which necessitates an immediate change in order to avoid a delay in progress of the Work may be expedited by verbal communication and authorization between Contractor and Owner, with written confirmation following within twenty-four (24) hours. A limited scope not-to-exceed estimate of cost and time will be requested prior to authorizing Work to proceed. Should the estimate be impractical for any reason, ODR may authorize the use of detailed cost records of such work to establish and confirm the actual costs and time for documentation in a formal Change Order.

11.7.4 Emergency changes to save life or property may be initiated by Contractor alone (see Section 7.3) with the claimed cost and/or time of such work to be fully documented as to necessity and detail of the reported costs and/or time.

11.7.5 The method of incorporating approved Change Orders into the parameters of the accepted Schedule of Values must be coordinated and administered in a manner acceptable to ODR.

11.8 Pricing Change Order Work. The amounts that Contractor and/or its Subcontractor adds to a Change Order for profit and overhead will also be considered by Owner before approval is given. The amounts established hereinafter are the maximums that are acceptable to Owner.

11.8.1 For Work performed by its forces, Contractor will be allowed their actual costs for materials, the total amount of wages (including benefits) paid for labor, plus the total cost of State and Federal payroll taxes and of worker's compensation and comprehensive general liability insurance, plus additional bond and builders risk insurance cost if the change results in an increase in the premium paid by Contractor. To the total of the above costs, Contractor will be allowed to add a percentage as noted below to cover overhead and profit combined. Allowable percentages for overhead and profit on any specific change shall not exceed fifteen (15) percent for the first $10,000 of

DocuSign Envelope ID: 4D7A9C98-4F30-4D1D-907E-9A92F807637B

value for self-performed work or portion thereof, ten (10) percent for the second $10,000 of value for self-performed work or portion thereof and seven and a half (7.5) percent for any value of the self-performed work that exceeds $20,000.

11.8.2 For subcontracted Work each affected Subcontractor shall figure its costs, overhead and profit as described above for Contractor's Work, all Subcontractor costs shall be combined, and to that total Subcontractor cost Contractor will be allowed to add a maximum mark-up of ten (10) percent for the first $10,000 of subcontracted Work value or portion thereof, seven and half (7.5) percent for the second $10,000 of subcontracted Work value or portion thereof, and five (5) percent for any value of the subcontracted Work exceeding $20,000.

11.8.3 On changes involving both additions and deletions, percentages for overhead and profit will be allowed only on the net addition. Owner does not accept and will not pay for additional Contract cost identified as indirect or consequential damages.

11.8.4 For Contracts based on a Guaranteed Maximum Price (GMP), the Construction Manager-at-Risk or Design Builder shall NOT be entitled to a percentage mark-up on any Change Order Work unless the Change Order increases the Guaranteed Maximum Price.

11.9 Unilateral Change Order (ULCO). Owner may issue a written ULCO directing a change in the Work prior to reaching agreement with Contractor on the adjustment, if any, in the Contract price and/or the Contract Time.

11.9.1 Owner and Contractor shall negotiate for appropriate adjustments, as applicable, to the Contract Sum or the Contract Time arising out of a ULCO. As the changed Work is performed, Contractor shall submit its costs for such Work with its Application for Payment beginning with the next Application for Payment within thirty (30) days of the issuance of the ULCO. The Parties reserve their rights as to the disputed amount, subject to Article 15.

11.10 Final Resolution of Changes. Upon execution of a Change Order and /or a ULCO by Owner, Contractor and A/E, all costs and time issues regarding that change are final and not subject to additive adjustments.

Article 12. Project Completion and Acceptance

12.1 Closing Inspections.

12.1.1 Substantial Completion Inspection. When Contractor considers the entire Work or part thereof Substantially Complete, it shall notify ODR in writing that the Work will be ready for Substantial Completion inspection on a specific date. Contractor shall include with this notice Contractor's Punchlist to indicate that it has previously inspected all the Work associated with the request for inspection, noting items it has corrected and included all remaining

DocuSign Envelope ID: 4D7A9C98-4F30-4D1D-907E-9A92F807637B

work items with date scheduled for completion or correction prior to final inspection. The failure to include any items on this list does not alter the responsibility of Contractor to complete all Work in accordance with the Contract Documents. If any of the items on this list prevents the Project from being used as intended, Contractor shall not request a Substantial Completion Inspection. Owner and its representatives will review the list of items and schedule the requested inspection, or inform Contractor in writing that such an inspection is premature because the Work is not sufficiently advanced or conditions are not as represented on Contractor's list.

12.1.1.1 Prior to the Substantial Completion inspection, Contractor shall furnish a copy of its marked-up Record Documents and a preliminary copy of each instructional manual, maintenance and operating manual, parts catalog, wiring diagrams, spare parts, specified written warranties, and like publications or parts for all installed equipment, systems, and like items as described in the Contract Documents. Delivery of these items is a prerequisite for requesting the Substantial Completion inspection.

12.1.1.2 On the date requested by Contractor, or as mutually agreed upon pending the status of the Open Items List, A/E, ODR, Contractor, and other Owner representatives as determined by Owner will jointly attend the Substantial Completion inspection, which shall be conducted by ODR or their delegate. If ODR determines that the Work is Substantially Complete, ODR will issue a Certificate of Substantial Completion to be signed by A/E, Owner, and Contractor establishing the date of Substantial Completion and identifying responsibilities for security, maintenance, insurance and utilities. A/E will provide with this certificate a consolidated list of Punchlist items (the pre-final Punchlist including all items noted by the various inspecting parties) for completion prior to final inspection. This list may include items in addition to those on Contractor's Punchlist, which the inspection team deems necessary to correct or complete prior to final inspection. The failure to include any items on this list does not alter the responsibility of Contractor to complete all Work in accordance with the Contract Documents. If Owner occupies the Project upon determination of Substantial Completion, Contractor shall complete all corrective Work at the convenience of Owner, without disruption to Owner's use of the Project for its intended purposes.

12.1.2 Final Inspection. Contractor shall complete the list of items identified on the pre-final Punchlist prior to requesting a final inspection. Unless otherwise specified, or otherwise agreed in writing by the parties as documented on the Certificate of Substantial Completion, Contractor shall complete and/or correct all Work within thirty (30) days of the Substantial Completion date. Upon completion of the pre-final Punchlist work, Contractor shall give written notice to ODR and A/E that the Work will be ready for final inspection on a specific date. Contractor shall accompany this notice

DocuSign Envelope ID: 4D7A9C98-4F30-4D1D-907E-9A92F807637B

with a copy of the updated pre-final Punchlist indicating resolution of all items. On the date specified or as soon thereafter as is practicable, ODR, A/E and Contractor will inspect the Work. A/E will submit to Contractor a final Punchlist of open items that the inspection team requires corrected or completed before final acceptance of the Work.

12.1.2.1 Correct or complete all items on the final Punchlist before requesting Final Payment. Unless otherwise agreed to in writing by the parties, complete this work within seven (7) days of receiving the final Punchlist. Upon completion of the final Punchlist, notify A/E and ODR in writing stating the disposition of each final Punchlist item. A/E, Owner, and Contractor shall promptly inspect the completed items. When the final Punchlist is complete, and the Contract is fully satisfied according to the Contract Documents ODR will issue a certificate establishing the date of Final Completion. Completion of all Work is a condition precedent to Contractor's right to receive Final Payment.

12.1.3 Annotation. Any Certificate issued under this Article may be annotated to indicate that it is not applicable to specified portions of the Work, or that it is subject to any limitation as determined by Owner.

12.1.4 Purpose of Inspection. Inspection is for determining the completion of the Work, and does not relieve Contractor of its overall responsibility for completing the Work in a good and competent fashion, in compliance with the Contract. Work accepted with incomplete Punchlist items or failure of Owner or other parties to identify Work that does not comply with the Contract Documents or is defective in operation or workmanship does not constitute a waiver of Owner's rights under the Contract or relieve Contractor of its responsibility for performance or warranties.

12.1.5 Additional Inspections.

12.1.5.1 If Owner's inspection team determines that the Work is not substantially complete at the Substantial Completion inspection, ODR or A/E will give Contractor written notice listing cause(s) of the rejection. Contractor will set a time for completion of incomplete or defective work acceptable to ODR. Contractor shall complete or correct all work so designated prior to requesting a second Substantial Completion inspection.

12.1.5.2 If Owner's inspection team determines that the Work is not complete at the final inspection, ODR or A/E will give Contractor written notice listing the cause(s) of the rejection. Contractor will set a time for completion of incomplete or defective work acceptable to ODR. Contractor shall complete or correct all Work so designated prior to again requesting a final inspection.

DocuSign Envelope ID: 4D7A9C98-4F30-4D1D-907E-9A92F807637B

12.1.5.3 The Contract contemplates three (3) comprehensive inspections: the Substantial Completion inspection, the Final Completion inspection, and the inspection of completed final Punchlist items. The cost to Owner of additional inspections resulting from the Work not being ready for one or more of these inspections is the responsibility of Contractor. Owner may issue a ULCO deducting these costs from Final Payment. Upon Contractor's written request, Owner will furnish documentation of any costs so deducted. Work added to the Contract by Change Order after Substantial Completion inspection is not corrective Work for purposes of determining timely completion, or assessing the cost of additional inspections.

12.1.6 Phased Completion. The Contract may provide, or Project conditions may warrant, as determined by ODR, that designated elements or parts of the Work be completed in phases. Where phased completion is required or specifically agreed to by the parties, the provisions of the Contract related to closing inspections, occupancy, and acceptance apply independently to each designated element or part of the Work. For all other purposes, unless otherwise agreed by the parties in writing, Substantial Completion of the Work as a whole is the date on which the last element or part of the Work completed receives a Substantial Completion certificate.

Final Completion of the Work as a whole is the date on which the last element or part of the Work completed receives a Final Completion certificate.

12.2 Owner's Right of Occupancy. Owner may occupy or use all or any portion of the Work following Substantial Completion, or at any earlier stage of completion. Should Owner wish to use or occupy the Work, or part thereof, prior to Substantial Completion, ODR will notify Contractor in writing and identify responsibilities for security, maintenance, insurance and utilities. Work performed on the premises by third parties on Owner's behalf does not constitute occupation or use of the Work by Owner for purposes of this Article. All Work performed by Contractor after occupancy, whether in part or in whole, shall be at the convenience of Owner so as to not disrupt Owner's use of, or access to occupied areas of the Project.

12.3 Acceptance and Payment

12.3.1 Request for Final Payment. Following the certified completion of all work, including all final Punchlist items, cleanup, and the delivery of record documents, Contractor shall submit a certified Application for Final Payment and include all sums held as retainage and forward to A/E and ODR for review and approval.

12.3.2 Final Payment Documentation. Contractor shall submit, prior to or with the Application for Final Payment, final copies of all close out documents, maintenance and operating instructions, guarantees and warranties, certificates, Record Documents and all other items required by the Contract.

DocuSign Envelope ID: 4D7A9C98-4F30-4D1D-907E-9A92F807637B

Contractor shall submit evidence of return of access keys and cards, evidence of delivery to Owner of attic stock, spare parts, and other specified materials. Contractor shall submit consent of surety to Final Payment form and an affidavit that all payrolls, bills for materials and equipment, subcontracted work and other indebtedness connected with the Work, except as specifically noted, are paid, will be paid, after payment from Owner or otherwise satisfied within the period of time required by Tex. Gov't Code, Ch. 2251. Contractor shall furnish documentation establishing payment or satisfaction of all such obligations, such as receipts, releases and waivers of claims and liens arising out of the Contract. Contractor may not subsequently submit a claim on behalf of Subcontractor or vendor unless Contractor's affidavit notes that claim as an exception.

12.3.3 Architect/Engineer Approval. A/E will review a submitted Application for Final Payment promptly but in no event later than ten (10) days after its receipt. Prior to the expiration of this deadline, A/E will either: 1) return the Application for Final Payment to Contractor with corrections for action and resubmission; or 2) accept it, note their approval, and send to Owner.

12.3.4 Offsets and Deductions. Owner may deduct from the Final Payment all sums due from Contractor. If the Certificate of Final Completion notes any Work remaining, incomplete, or defects not remedied, Owner may deduct the cost of remedying such deficiencies from the Final Payment. On such deductions, Owner will identify each deduction, the amount, and the explanation of the deduction on or by the twenty-first (21st) day after Owner's receipt of an approved Application for Final Payment. Such offsets and deductions shall be incorporated via a final Change Order, including a ULCO as may be applicable.

12.3.5 Final Payment Due. Final Payment is due and payable by Owner, subject to all allowable offsets and deductions, on the thirtieth (30th) day following Owner's approval of the Application for Payment. If Contractor disputes any amount deducted by Owner, Contractor shall give notice of the dispute on or before the thirtieth (30th) day following receipt of Final Payment. Failure to do so will bar any subsequent claim for payment of amounts deducted.

12.3.6 Effect of Final Payment. Final Payment constitutes a waiver of all claims by Owner, relating to the condition of the Work except those arising from:

12.3.6.1 Faulty or defective Work appearing after Substantial Completion (latent defects);

12.3.6.2 Failure of the Work to comply with the requirements of the Contract Documents;

12.3.6.3 Terms of any warranties required by the Contract, or implied by law; or

DocuSign Envelope ID: 4D7A9C98-4F30-4D1D-907E-9A92F807637B

12.3.6.4 Claims arising from personal injury or property damage to third parties.

12.3.7 Waiver of Claims. Final payment constitutes a waiver of all claims and liens by Contractor except those specifically identified in writing and submitted to ODR prior to the application for Final Payment.

12.3.8 Effect on Warranty. Regardless of approval and issuance of Final Payment, the Contract is not deemed fully performed by Contractor and closed until the expiration of all warranty periods. Issuance of Final Payment does not alter Contractor's contractual obligations during the warranty period.

Article 13. Warranty and Guarantee

13.1 Contractor's General Warranty and Guarantee. Contractor warrants to Owner that all Work is executed in accordance with the Contract, complete in all parts and in accordance with approved practices and customs, and of the required finish and workmanship. Contractor further warrants that unless otherwise specified, all materials and equipment incorporated in the Work under the Contract are new. Owner may, at its option, agree in writing to waive any failure of the Work to conform to the Contract, and to accept a reduction in the Contract price for the cost of repair or diminution in value of the Work by reason of such defect. Absent such a written agreement, Contractor's obligation to perform and complete the Work in accordance with the Contract Documents is absolute and is not waived by any inspection or observation by Owner, A/E or others, by making any progress payment or final payment, by the use or occupancy of the Work or any portion thereof by Owner, at any time, or by any repair or correction of such defect made by Owner.

13.2 Warranty Period. Except as may be otherwise specified or agreed, Contractor shall repair all defects in materials, equipment, or workmanship appearing within one year from the date of Substantial Completion of the Work. If Substantial Completion occurs by phase, then the warranty period for that particular Work begins on the date of such occurrence, or as otherwise stipulated on the Certificate of Substantial Completion for the particular Work.

13.3 Limits on Warranty. Contractor's warranty and guarantee hereunder excludes defects or damage caused by:

13.3.1 Modification or improper maintenance or operation by persons other than Contractor, Subcontractors, or any other individual or entity for whom Contractor is not responsible, unless Owner is compelled to undertake maintenance or operation due to the neglect of Contractor.

13.3.2 Normal wear and tear under normal usage after acceptance of the Work by Owner.

DocuSign Envelope ID: 4D7A9C98-4F30-4D1D-907E-9A92F807637B

13.4 Events Not Affecting Warranty. Contractor's obligation to perform and complete the Work in a good and workmanlike manner in accordance with the Contract Documents is absolute. None of the following will constitute an acceptance of defective Work that is not in accordance with the Contract Documents or a release of Contractor's obligation to perform the Work in accordance with the Contract Documents:

13.4.1 Observations by Owner and/or A/E;

13.4.2 Recommendation to pay any progress or final payment by A/E;

13.4.3 The issuance of a certificate of Substantial Completion or any payment by Owner to Contractor under the Contract Documents;

13.4.4 Use or occupancy of the Work or any part thereof by Owner;

13.4.5 Any acceptance by Owner or any failure to do so;

13.4.6 Any review of a Shop Drawing or sample submittal; or

13.4.7 Any inspection, test or approval by others.

13.5 Separate Warranties. If a particular piece of equipment or component of the Work for which the Contract requires a separate warranty is placed in continuous service before Substantial Completion, the warranty period for that equipment or component will not begin until Substantial Completion, regardless of any warranty agreements in place between suppliers and/or Subcontractors and Contractor. ODR will certify the date of service commencement in the Substantial Completion certificate.

13.5.1 In addition to Contractor's warranty and duty to repair, Contractor expressly assumes all warranty obligations required under the Contract for specific building components, systems and equipment.

13.5.2 Contractor may satisfy any such obligation by obtaining and assigning to Owner a complying warranty from a manufacturer, supplier, or Subcontractor. Where an assigned warranty is tendered and accepted by Owner which does not fully comply with the requirements of the Contract, Contractor remains liable to Owner on all elements of the required warranty not provided by the assigned warranty.

13.6 Correction of Defects. Upon receipt of written notice from Owner, or any agent of Owner designated as responsible for management of the warranty period, of the discovery of a defect, Contractor shall promptly remedy the defect(s), and provide written notice to Owner and designated agent indicating action taken. In case of emergency where delay would cause serious risk of loss or damage to Owner, or if Contractor fails to remedy within thirty (30) days, or within another period agreed to in writing, Owner may correct the defect and be reimbursed the cost of remedying the defect from Contractor or its surety.

DocuSign Envelope ID: 4D7A9C98-4F30-4D1D-907E-9A92F807637B

13.7 Certification of No Asbestos Containing Materials or Work. Contractor shall ensure compliance with the Asbestos Hazard Emergency Response Act (AHERA– 40 C.F.R § 763-99(7)) from all Subcontractors and materials suppliers, and shall provide a notarized certification to Owner that all equipment and materials used in fulfillment of their Contract responsibilities are non-Asbestos Containing Building Materials (ACBM). This certification must be provided no later than Contractor's application for Final Payment.

Article 14. Suspension and Termination

14.1 Suspension of Work for Cause. Owner may, at any time without prior notice, suspend all or any part of the Work, if after reasonable observation and/or investigation, Owner determines it is necessary to do so to prevent or correct any condition of the Work, which constitutes an immediate safety hazard, or which may reasonably be expected to impair the integrity, usefulness or longevity of the Work when completed.

14.1.1 Owner will give Contractor a written notice of suspension for cause, setting forth the reason for the suspension and identifying the Work suspended. Upon receipt of such notice, Contractor shall immediately stop the Work so identified. As soon as practicable following the issuance of such a notice, Owner will initiate and complete a further investigation of the circumstances giving rise to the suspension, and issue a written determination of the findings.

14.1.2 If it is confirmed that the cause was within the control of Contractor, Contractor will not be entitled to an extension of time or any compensation for delay resulting from the suspension. If the cause is determined not to have been within the control of Contractor, and the suspension has prevented Contractor from completing the Work within the Contract Time, the suspension is an excusable delay and a time extension will be granted through a Change Order.

14.1.3 Suspension of Work under this provision will be no longer than is reasonably necessary to remedy the conditions giving rise to the suspension.

14.2 Suspension of Work for Owner's Convenience. Upon seven (7) days written notice to Contractor, Owner may at any time without breach of the Contract suspend all or any portion of the Work for a period of up to thirty (30) days for its own convenience. Owner will give Contractor a written notice of suspension for convenience, which sets forth the number of suspension days for which the Work, or any portion of it, and the date on which the suspension of Work will cease. When such a suspension prevents Contractor from completing the Work within the Contract Time, it is an excusable delay. A notice of suspension for convenience may be modified by Owner at any time on seven (7) days written notice to Contractor. If Owner suspends the Work for its convenience for more than sixty (60) consecutive days, Contractor may elect to terminate the Contract pursuant to the provisions of the Contract.

DocuSign Envelope ID: 4D7A9C98-4F30-4D1D-907E-9A92F807637B

14.3 Termination by Owner for Cause.

14.3.1 Upon written notice to Contractor and its surety, Owner may, without prejudice to any right or remedy, terminate the Contract and take possession of the Site and of all materials, equipment, tools, construction equipment, and machinery thereon owned by Contractor under any of the following circumstances:

14.3.1.1 Persistent or repeated failure or refusal, except during complete or partial suspensions of work authorized under the Contract, to supply enough properly skilled workmen or proper materials;

14.3.1.2 Persistent disregard of laws, ordinances, rules, regulations or orders of any public authority having jurisdiction, including ODR;

14.3.1.3 Persistent failure to prosecute the Work in accordance with the Contract, and to ensure its completion within the time, or any approved extension thereof, specified in the Contract;

14.3.1.4 Failure to remedy defective work condemned by ODR;

14.3.1.5 Failure to pay Subcontractors, laborers, and material suppliers pursuant to Tex. Gov't Code, Ch. 2251;

14.3.1.6 Persistent endangerment to the safety of labor or of the Work;

14.3.1.7 Failure to supply or maintain statutory bonds or to maintain required insurance, pursuant to the Contract;

14.3.1.8 Any material breach of the Contract; or

14.3.1.9 Contractor's insolvency, bankruptcy, or demonstrated financial inability to perform the Work.

14.3.2 Failure by Owner to exercise the right to terminate in any instance is not a waiver of the right to do so in any other instance.

14.3.3 Should Owner decide to terminate the Contract under the provisions of Section 14.3, it will provide to Contractor and its surety thirty (30) days prior written notice.

14.3.4 Should Contractor or its surety, after having received notice of termination, demonstrate to the satisfaction of Owner that Contractor or its surety are proceeding to correct such default with diligence and promptness, upon which the notice of termination was based, the notice of termination may be rescinded in writing by Owner. If so rescinded, the Work may continue without an extension of time.

DocuSign Envelope ID: 4D7A9C98-4F30-4D1D-907E-9A92F807637B

14.3.5 If Contractor or its surety fails, after written notice from Owner to commence and continue correction of such default with diligence and promptness to the satisfaction of Owner within thirty (30) days following receipt of notice, Owner may arrange for completion of the Work and deduct the cost of completion from the unpaid Contract Sum.

14.3.5.1 This amount includes the cost of additional Owner costs such as A/E services, other consultants, and contract administration.

14.3.5.2 Owner will make no further payment to Contractor or its surety unless the costs to complete the Work are less than the Contract balance, then the difference shall be paid to Contractor or its surety. If such costs exceed the unpaid balance, Contractor or its surety will pay the difference to Owner.

14.3.5.3 This obligation for payment survives the termination of the Contract.

14.3.5.4 Owner reserves the right in termination for cause to take assignment of all the Contracts between Contractor and its Subcontractors, vendors, and suppliers. ODR will promptly notify Contractor of the contracts Owner elects to assume. Upon receipt of such notice, Contractor shall promptly take all steps necessary to effect such assignment.

14.4 Conversion to Termination for Convenience. In the event that any termination of Contractor for cause under Section 14.3 is later determined to have been improper, the termination shall automatically convert to a termination for convenience under Section 14.5 and Contractor's recovery for termination shall be strictly limited to the payments allowable under Section 14.5.

14.5 Termination for Convenience of Owner. Owner reserves the right, without breach, to terminate the Contract prior to, or during the performance of the Work, for any reason. Upon such an occurrence, the following shall apply:

14.5.1 Owner will immediately notify Contractor and A/E in writing, specifying the reason for and the effective date of the Contract termination. Such notice may also contain instructions necessary for the protection, storage or decommissioning of incomplete work or systems, and for safety.

14.5.2 Upon receipt of the notice of termination, Contractor shall immediately proceed with the following obligations, regardless of any delay in determining or adjusting any amounts due at that point in the Contract:

14.5.2.1 Stop all work.

14.5.2.2 Place no further subcontracts or orders for materials or services.

14.5.2.3 Terminate all subcontracts for convenience.

DocuSign Envelope ID: 4D7A9C98-4F30-4D1D-907E-9A92F807637B

14.5.2.4 Cancel all materials and equipment orders as applicable.

14.5.2.5 Take action that is necessary to protect and preserve all property related to the Contract which is in the possession of Contractor.

14.5.3 When the Contract is terminated for Owner's convenience, Contractor may recover from Owner payment for all Work executed. Contractor may not claim lost profits on other work or lost business opportunities.

14.6 Termination By Contractor. If the Work is stopped for a period of ninety (90) days under an order of any court or other public authority having jurisdiction, or as a result of an act of government, such as a declaration of a national emergency making materials unavailable, through no act or fault of Contractor or Subcontractor or their agents or employees or any other persons performing any of the Work under a contract with Contractor, then Contractor may, upon thirty (30) additional days written notice to ODR, terminate the Contract and recover from Owner payment for all Work executed, but not lost profits on other work or lost business opportunities. If the cause of the Work stoppage is removed prior to the end of the thirty (30) day notice period, Contractor may not terminate the Contract.

14.7 Settlement on Termination. When the Contract is terminated for any reason, at any time prior to one hundred eighty (180) days after the effective date of termination, Contractor shall submit a final termination settlement proposal to Owner based upon recoverable costs as provided under the Contract. If Contractor fails to submit the proposal within the time allowed, Owner may determine the amount due to Contractor because of the termination and pay the determined amount to Contractor.

Article 15. Dispute Resolution

15.1 Unresolved Contractor Disputes. The dispute resolution process provided for in Tex. Gov't Code, Ch. 2260 or Tex. Civ. Prac. & Rem. Code, Ch. 114, shall be used by Contractor to attempt to resolve any claim for breach of Contract made by Contractor that is not resolved under procedures described throughout the Uniform General Conditions, Supplementary Conditions, or Special Conditions of the Contract.

15.2 Alternative Dispute Resolution Process. Owner may establish a dispute resolution process to be utilized in advance of that outlined in Tex. Gov't Code, Ch. 2260 or Tex. Civ. Prac. & Rem. Code, Ch. 114.

15.3 Nothing herein shall hinder, prevent, or be construed as a waiver of Owner's right to seek redress on any disputed matter in a court of competent jurisdiction.

15.4 Nothing herein shall waive or be construed as a waiver of the State's sovereign immunity.

DocuSign Envelope ID: 4D7A9C98-4F30-4D1D-907E-9A92F807637B

Article 16. Miscellaneous

16.1 Supplementary General and Special Conditions. When the Work contemplated by Owner is of such a character that the foregoing Uniform General Conditions of the Contract cannot adequately cover necessary and additional contractual relationships, the Contract may include Supplementary General and Special Conditions as described below:

16.1.1 Supplementary General Conditions may describe the standard procedures and requirements of contract administration followed by a contracting agency of the State. Supplementary General Conditions may expand upon matters covered by the Uniform General Conditions, where necessary, provided the expansion does not weaken the character or intent of the Uniform General Conditions. Supplementary General Conditions are of such a character that it is to be anticipated that a contracting agency of the State will normally use the same, or similar, conditions to supplement each of its several projects.

16.1.2 Special Conditions shall relate to a particular Project and be unique to that Project but shall not weaken the character or intent of the Uniform General Conditions.

16.2 Federally Funded Projects. On Federally funded projects, Owner may waive, suspend or modify any Article in these Uniform General Conditions which conflicts with any Federal statue, rule, regulation or procedure, where such waiver, suspension or modification is essential to receipt by Owner of such Federal funds for the Project. In the case of any Project wholly financed by Federal funds, any standards required by the enabling Federal statute, or any Federal rules, regulations or procedures adopted pursuant thereto, shall be controlling.

16.3 Internet-based Project Management Systems. At its option, Owner may administer its design and construction management through an Internet-based management system. In such cases, Contractor shall conduct communication through this media and perform all Project related functions utilizing this database system. This includes correspondence, submittals, Requests for Information, vouchers or payment requests and processing, amendment, Change Orders and other administrative activities.

16.3.1 Accessibility and Administration.

16.3.1.1 When used, Owner will make the software accessible via the Internet to all Project team members.

16.3.1.2 Owner shall administer the software.

16.3.2 Training. When used, Owner shall provide training to the Project team members.

16.4 Administrative Inspections and Audits. Contractor agrees that all relevant records related to this Contract or any work product under this Contract, including practices of its Subcontractors, shall be subject, at any reasonable time, to inspection, examination, review, audit, and copying at any office or location of Contractor where such records

DocuSign Envelope ID: 4D7A9C98-4F30-4D1D-907E-9A92F807637B

may be found, with or without notice by the Texas State Auditor's Office ("SAO"), the contracting agency or its contracted examiners, or the Office of the Texas Attorney General, and with regard to any federal funding, the relevant federal agency, the Comptroller General, the General Accounting Office, the Office of the Inspector General, or any of their authorized representatives. All Subcontracts shall reflect the requirements of this section. In addition, pursuant to Tex. Gov't Code§ 2262.003 the SAO may conduct an audit or investigation of any entity receiving funds under this Contract, including direct payments to Contractor and indirect payments under a Subcontract to this Contract; acceptance of such monies acts as acceptance of SAO authority, under legislative audit committee direction, to audit and investigate related to those funds and the entity subject to the audit or investigation must provide SAO with access to any information SAO considers relevant to the scope of the audit or investigation.

End of Uniform General Conditions

DocuSign Envelope ID: 4D7A9C98-4F30-4D1D-907E-9A92F807637B

EXHIBIT B

2018 SUPPLEMENTARY GENERAL CONDITIONS

DocuSign Envelope ID: 4D7A9C98-4F30-4D1D-907E-9A92F807637B

2018 SUPPLEMENTARY GENERAL CONDITIONS TO THE STATE OF TEXAS 2015 EDITION OF THE UNIFORM GENERAL CONDITIONS FOR CONTRACTS

The following Supplementary General Conditions amend and/or supplement the 2015 edition of the Uniform General Conditions for Construction Contracts and, at TFC's sole discretion, provides for bonding per GMP.

Article 5. Bonds and Insurance

5.1. Construction Bonds.

Subsection 5.1.1.1 is supplemented to modify 5.1.1.1. as follows:

> A Performance bond is required if the Contract Sum is in excess of $100,000. The performance bond is solely for the protection of Owner. Except for Construction Manager-at-Risk Contracts where, in Owner's sole discretion and determination, a Performance Bond is acceptable in the amount of the guaranteed maximum price (GMP), the performance bond is to be for the Contract Sum to guarantee the faithful performance of the Work in accordance with the Contract Documents. The form of the bond shall be approved by the Office of the Attorney General of Texas. The performance bond shall be effective through Contractor's warranty period.

Subsection 5.1.1.2 is supplemented to modify 5.1.1.2. as follows:

> A Payment bond is required if the Contract price is in excess of $25,000. Except for Construction Manager-at-Risk Contracts where, in Owner's sole discretion and determination, a Payment Bond is acceptable in the amount of the guaranteed maximum price (GMP), the payment bond is to be for the Contract Sum and is payable to Owner solely for the protection and use of payment bond beneficiaries. The form of the bond shall be approved by the Office of the Attorney General of Texas.

5.2 Insurance Requirements.

Subsection 5.2.4 is supplemented to add the following new paragraphs:

5.2.4.1 Contractor shall deliver to Owner true and complete copies of the General Contractor's certificates prior to the issuance of any Notice to Proceed.

5.2.4.2 Failure of Owner to demand such certificates or other evidence of Contractor's full compliance with these insurance requirements or failure of Owner to identify a deficiency in compliance from the evidence provided shall not be construed as a waiver of Contractor's obligation to maintain such insurance.

DocuSign Envelope ID: 4D7A9C98-4F30-4D1D-907E-9A92F807637B

5.2.4.3 The insurance and insurance limits required herein shall not be deemed as a limitation on Contractor's liability under the indemnities granted to Owner in the Contract Documents.

5.2.4.4 The insurance coverage and limits established in the Uniform General Conditions, Supplementary General Conditions, or Special Conditions shall not be interpreted as any representation or warranty that the insurance coverage and limits necessarily will be adequate to protect Contractor.

Article 2. Wage Rates and Other Laws Governing Construction

Add Section 2.7 as follows:

2.7 Buy America Requirements for Iron and Steel Used in Construction. In accordance with Texas Government Code 2252, Section 2252.202, all iron or steel products (i.e., rolled structural shapes including wide flange beams and columns, angles, bars, plates, sheets, hollow structural sections, pipe, etc.) shall be produced, manufactured and fabricated in the United States.

End of Supplementary General Conditions

DocuSign Envelope ID: 4D7A9C98-4F30-4D1D-907E-9A92F807637B

EXHIBIT C

TFC 2018 ARCHITECTURAL/ENGINEERING GUIDELINES, EDIT DATE MARCH 19, 2018

TEXAS FACILITIES COMMISSION

Edit Date: 3/19/2018

2018 ARCHITECTURAL/ENGINEERING GUIDELINES

This document has been revised and replaces the previously published document dated 8/24/2017. Changes highlighted in gray have been added for the 3/19/2018 minor revision (links to Revit template files have been updated). 8/24/2017 changes to the 4/16/2012 document are highlighted in yellow. Appendices dated 4/13/2012 remain in force.

Additional revisions to the Guidelines/Standards will be issued from time to time to reflect the latest TFC practices. The electronic version of this document is available on-line at http://www.tfc.state.tx.us/divisions/facilities/prog/construct/formsindex/ and contains hyperlinks to referenced documents and relevant internet web-sites as well as pertinent locations within the document itself.

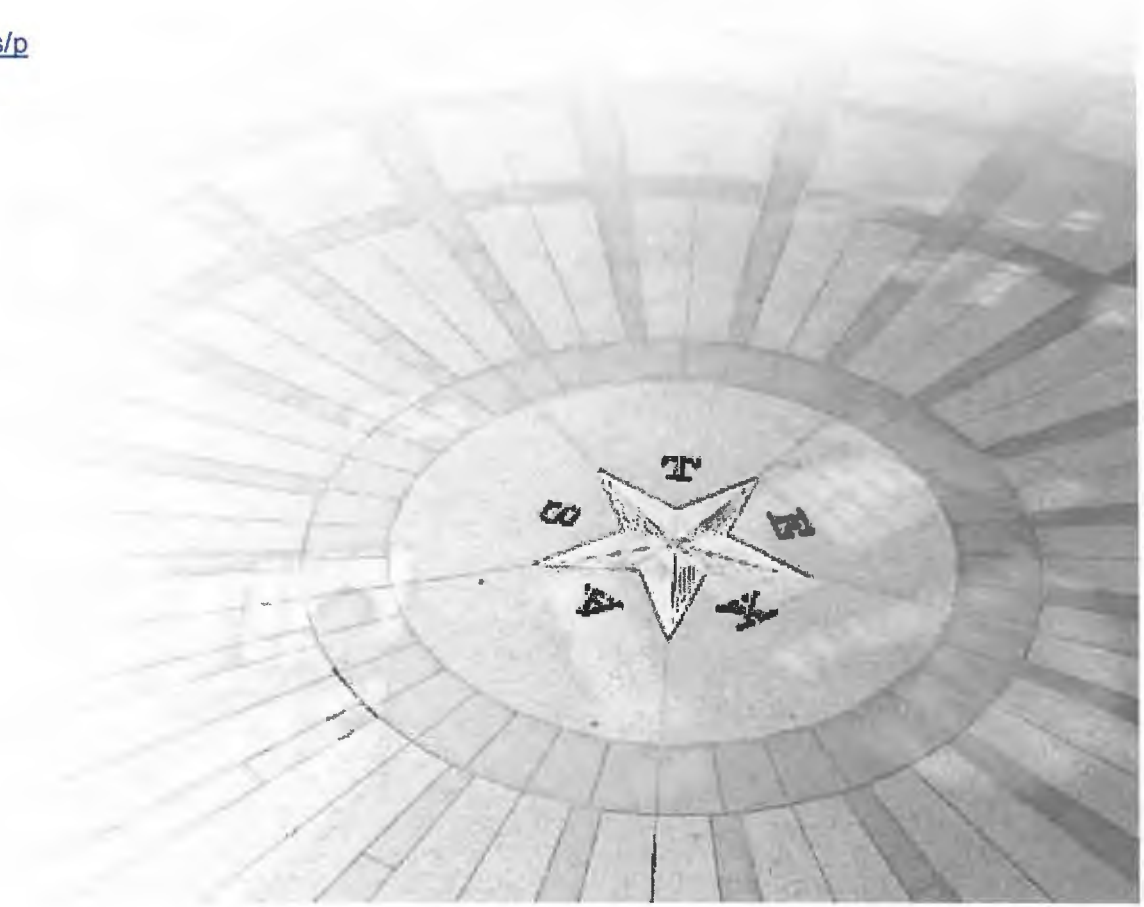

DocuSign Envelope ID: 4D7A9C98-4F30-4D1D-907E-9A92F807637B

TABLE OF CONTENTS

TABLE OF CONTENTS 2
ABBREVIATIONS 3
GUIDELINES / STANDARDS - PURPOSE 5
STATE AGENCIES 6
STATUTORY REQUIREMENTS 7
SUBMISSION PROCEDURES 13
Round Trip Review Process Diagram 16
SUBMISSION MILESTONES 17
SUBMISSION CONTENT 19
Assessment (Pre-design) 19
Schematic Design 21
Design Development 31
Contract Documents 37
Contract Bidding & Award 41
Construction 43
Warranty 44
DRAWING STANDARDS - RECOMMENDED DOCUMENT ORGANIZATION 45
CADD / BIM STANDARDS – OVERVIEW 47
CADD STANDARDS 48
BIM STANDARDS 52
BIM Standards - File Types 52
BIM Standards – Work Flow Diagram 53
BIM Standards – Team Collaboration 62
Revit View Settings 63
Revit Partitions 65
Partition Assembly Type (Letter) 65
Core Type (Digit) 65
Partition Height Type (Letter - or - 2 Digits for Inches @ partial height walls) 65
Fire Rating (F+2 Digits) 65
Sound Rating (S+2 Digit STC Rating) 65
Revit Door Types 68
Revit Room Styles 71
Revit Materials 72
Recommended Practices 77
APPENDICES 78
WEB LINKS INCLUDED IN THIS DOCUMENT 79
INDEX 82

ABBREVIATIONS - GENERAL

ADA	Americans With Disabilities Act
ADAS	ADA Standards
AHJ	Authority Having Jurisdiction
ANSI	American National Standards Institute
ASHRAE	The American Society of Heating, Refrigerating and Air-Conditioning Engineers
BMS	Building Management System
BIM	Building Information Modeling
BIM360	Autodesk BIM 360 Team (TFC's adopted BIM Collaboration Environment)
C4R	Autodesk Collaboration for Revit (TFC's adopted Revit Team Collaboration Software)
CADD	Computer Aided Design and Drafting
CHP	Combined Heating and Power System
COA	City of Austin
DIR	Department of Information Resources
DPM	Director of Project Management (TFC)
DPS	Department of Public Safety
DWFX	Autodesk Design Review file type
DWG	Autodesk Autocad file type
EAB	Elimination of Architectural Barriers
EM	Energy Management (TFC)
EPMCS	Electronic Project Management Control System (TFC)
FDC	Facilities Design and Construction (TFC)
FOM	Facilities Operations and Maintenance (TFC)
HSC	Health & Safety Code (Texas)
HUB	Historically Underutilized Business Program (TFC)
IAECS	Internal AEC Services (TFC-FDC)
ICC	International Code Council
IECC	International Energy Conservation Code
IMPACT	TFC's Internet–based "Project Management Control System"
IPD	Internal Procurement Division (TFC)
LDC	Land Development Code (City of Austin)
LJA	Local Jurisdictional Authority(ies) – Building Plan Review, Site Plan Review, Utility Providers, Fire Department...
NFPA	National Fire Protection Association
NWD	Autodesk Navisworks file type
OAC	Owner / Architect / Contractor
PREM	Planning and Real Estate Management (TFC)
PDF	Adobe Acrobat file type
PSP	Professional Service Provider
RVT	Autodesk Revit file type
SECO	State Energy Conservation Office
SFMO	State Fire Marshal's Office
SGC	Supplementary General Conditions
TAC	Texas Administrative Code
TAS	Texas Accessibility Standards
TCEQ	Texas Commission on Environmental Quality
TDLR	Texas Department of Licensing and Regulation
TDI	Texas Department of Insurance
TFC	Texas Facilities Commission
TGC	Texas Statutes - Government Code
THC	Texas Historical Commission
PS	Project Support (TFC-FDC-IAECS)
UA	Using Agency(ies)
UGC	Uniform General Conditions

Return to Table of Contents * See next page for more Abbreviations.

ABBREVIATIONS – DESIGN DISCIPLINES

ACOU	Acoustical	**INT**	Interiors
ARCH	Architecture	**KIT**	Kitchen
CIV	Civil Engineering	**LAR**	Landscape Architecture
COMM	Data/Communications	**MECH**	Mechanical Engineering
ELEC	Electrical Engineering	**PLUM**	Plumbing Engineering
FA	Fire Alarm	**SEC**	Security/Access Control
FP	Fire Protection (Fire Suppression)	**STRU**	Structural Engineering
FURN	Furniture		
GEN	General (Cover / Index…)		

ABBREVIATIONS – PROJECT PHASES

BA	Contract Bidding & Award	**PD**	Assessment (Pre-design)
CA	Construction Contract Administration	**PA**	Project Analysis
CD	Contract Documents	**RD**	Record Documents
DD	Design Development	**SD**	Schematic Design
IC	Initial Concept		

Return to Table of Contents

DocuSign Envelope ID: 4D7A9C98-4F30-4D1D-907E-9A92F807637B

GUIDELINES / STANDARDS - PURPOSE

TOPIC	INFORMATION	LINKS
Applicability	A. This document applies to all TFC projects contracted on or after the Edit Date indicated in the header above.	
Intent	A. Identify TFC preferred procedures, systems, and materials; and B. Aid the PSPs in delivering professional services resulting in facilities that meet or exceed TFC project and performance goals. C. **The Guidelines/Standards are not intended to replace or circumvent the informed professional judgment of planning, design, and construction Professional Service Providers (PSPs).** D. **Professional judgment leading to recommendations that differ from these Guidelines/Standards must be communicated in writing through TFC's Project Manager (PM) for consideration and determination by TFC.**	
Periodic Revisions	A. Revisions to the Guidelines/Standards will be issued from time to time to reflect the latest TFC practices, but only currently issued versions will be posted on the FDC Forms Index page of TFC's website. B. A project commencing under a specific Guidelines/Standards issue date may continue on the basis of that issue; however, it is the PSP's responsibility to keep a copy of the relevant Guidelines/Standards.	• FDC Forms Index
TFC Statutory Charge	A. Determining, creating, and protecting long term value in the public's investment for housing state government programs and functions. B. Texas Government Code (TGC) Chapter 2165 states that TFC: 1. "...has charge and control of all public buildings, grounds, and property..."; and 2. "...is the custodian of all state personal property...". C. Exceptions exist for certain named agencies and Higher Education.	• TGC 2165
Software Requirements	A. TFC has adopted Building Information Modeling (BIM) as a standard for all projects developed under TFC authority involving new construction and additions. B. For deferred maintenance and minor alteration projects, Building Information Modeling (BIM) is preferred but not necessarily required. 1. CADD software may be used only with prior written authorization from TFC's PM and TFC's IAECS Director. C. TFC-accepted BIM and CADD software versions are listed in the "CADD/BIM Standards - Overview" section of this document.	• CADD/BIM Standards • CADD Standards • BIM Standards

Return to Table of Contents Abbreviations

STATE AGENCIES		
Entity	**DESCRIPTION**	**LINKS**
Texas Facilities Commission (TFC)	A. Agent for the State of Texas; B. "Owner" and/or "Lessor" for capital construction and leasing projects. C. TFC Divisions: 1. **Facilities Design and Construction (FDC)**: a. Represents TFC in its capital construction projects; b. Assigns a Project Manager (PM) to each project. 2. **Planning and Real Estate Management (PREM)**: a. Reviews and approves space allocations for Using Agencies; 3. **Energy Management (EM)**: a. Monitors and evaluates energy consumption and provides recommendations for energy saving improvements. 4. **Facilities Operations and Maintenance (FOM)**: a. Operates and maintains building systems for properties included in the TFC inventory.. 5. **Internal Procurement Division (IPD)**: a. Procures goods and services for use by TFC including but not limited to: i. Construction Services; and ii. Professional services such as architectural and engineering services.	• TFC • FDC • PREM • EM • **FOM** • IPD
Using Agency (UA)	A. The agency (or agencies) for which TFC manages the design and construction process of a project.	
Other Key Agencies	A. **Department of Public Safety, Capitol District (DPS)**: 1. Administers the Austin area parking programs for TFC facilities; 2. Provides physical security for state personnel and property; and 3. Installs Capital area keyways and keys. B. **Elimination of Architectural Barriers (EAB)** - Texas Department of Licensing & Regulation's division responsible for certification of all plans and specifications for accessibility to persons with disabilities in accordance with the Texas Architectural Accessibility Standard. C. **State Energy Conservation Office (SECO)** - responsible for developing and administering standards for energy efficient design for state buildings and facilities. D. **Department of Information Resources Telecommunications (DIR)** - operates the local Capitol Complex telephone systems, a statewide long distance network and consults on telecommunication aspects of projects throughout the state.	• DPS • TDLR • EAB • SECO • DIR

STATUTORY REQUIREMENTS

REQUIREMENT	SUMMARY DESCRIPTION	LINKS
General	A. TFC statutory requirements of general interest to the PSP or that require PSP compliance include but are not limited to the following:	• TGC 2151 • TGC 2152 • TGC 2155 • TGC 2156 • TGC 2157 • TGC 2158 • TGC 2161 • TGC 2162 • TGC 2163 • TGC 2165 • TGC 2166 • TGC 2167
TFC Enabling Statute	A. The Texas Facilities Commission Act, Articles 2151 through 2167, Texas Government Code (TGC) establishes the authority of the Texas Facilities Commission.	
FDC Activities and Limits	A. TGC Chapter 2166 generally describes the activities and limits of the Facilities Design and Construction division of TFC.	
Project Funding	A. TGC Chapter 2166.251(c) "The appropriation of funds by the legislature for the construction of a project shall be construed by TFC and the using agency as an expression of legislative intent that the project be completed within the limits of the funds actually appropriated ..." B. The State's goal is to include all project requirements in the bid documents to assure that all aspects of the project have been competitively bid thereby resulting in the best value for the State.	
Change Orders	A. TGC Chapter 2166.257 - No additive change order may be authorized without approval by the PSP, the UA, and FDC's DED.	
Document Review	A. TGC Chapter 2166.156(c) "...ensure that [preliminary and working] plans and specifications" for all facilities constructed for the purpose of housing a State of Texas agency (or agencies): a. "Are clear and complete; b. Permit execution of the project with appropriate economy and efficiency; and c. Conform with the requirements described by the Project Analysis". B. TGC Chapter 2166.156(d) "...approve plans and specifications before the Using Agency(ies) may accept or use them."	

Return to Table of Contents * See next page for additional Statutory Requirements. Abbreviations

STATUTORY REQUIREMENTS (CONTINUED)

REQUIREMENT	SUMMARY DESCRIPTION	LINKS
Storm Water Pollution Prevention Plan	A. As applicable, projects may require a Storm Water Pollution Prevention Plan (SWPPP) per TCEQ.	• TCEQ Construction Activities Regulations
Capitol Views	A. Compliance with the most restrictive of the following is required: B. TGC Chapter 3151; and C. COA Land Development Code, 25-2-161, 162, 641, 642 and Appendix A.	• TGC 3151 • COA- LDC
Energy / Water Conservation	A. For leased and state owned facilities, TAC Title 34, Chapter 19, Subchapter B requires state agencies to: 1. "...ensure preparation of a Resource Efficiency Plan..."; 2. Certify to [SECO] that the plan has been completed; and 3. "...implement the cost effective utility conservation measures in accordance with ... the agency's Resource Efficiency Plan...". B. TGC Section 447.004 requires compliance with SECO's "The Energy Conservation Design Standard for New State Buildings". C. All design must comply with either ASHRAE 90.1 or IECC (currently adopted edition) and furnish evidence of compliance with energy efficiency and water conservation standards published by SECO. D. TGC Sections 2166.404 and 2166.405 require all projects to be designed for water conservation including irrigation and xeriscape planting. E. HSC 372.002 - Water saving performance standards;	• TAC • SECO • SECO Suggested Water Efficiency Standards • TGC 447.004 • ASHRAE Standards / Guidelines • IECC • TGC 2166.404 and 2166.405 • HSC 37.002

Return to Table of Contents * See next page for additional Statutory Requirements. Abbreviations

STATUTORY REQUIREMENTS (CONTINUED)		
REQUIREMENT	**SUMMARY DESCRIPTION**	**LINKS**
Energy Efficient Architectural and Engineering Design Alternatives Evaluation	A. TGC 2166.401 and 2166.403 - All projects, including new construction and alteration and repair projects where all or part of an energy system, energy source, or energy-consuming equipment is installed or replaced require a written economic feasibility evaluation of incorporating energy alternatives and energy-efficient architectural and engineering design into the building's design and proposed energy system. 1. Alternative Energy is defined as a renewable energy resource including solar energy, biomass energy, geothermal energy, and wind energy. 2. SECO must approve any methodology or electronic software used in the analysis. 3. The evaluation must identify the best energy alternative for each function of the project over the economic life of the building considering costs and benefits of implementing alternative design practices and energy systems for all or part of each function relative to the use of conventional design practices and energy systems. 4. The evaluation must be made available to the public and presented at an open meeting. 5. If alternative designs or energy systems are determined to be economically feasible, the alternative design or system must be incorporated into the project.	• TGC 2166.401 • TGC 2166.403 • SECO

Return to Table of Contents * See next page for additional Statutory Requirements. Abbreviations

DocuSign Envelope ID: 4D7A9C98-4F30-4D1D-907E-9A92F807637B

STATUTORY REQUIREMENTS (CONTINUED)

REQUIREMENT	SUMMARY DESCRIPTION	LINKS
Combined Heating and Power (CHP) System	A. TGC 2311.002 – For economic development programs involving both state and local governments, new construction and extensive HVAC equipment renovations to critical governmental facilities require evaluation of the economic feasibility (over a 20 year period) of equipping the facility with a Combined Heating and Power (CHP) system. 1. A critical government facility is defined as a building owned by the state or a political subdivision of the state that is expected to: a. Be continuously occupied; b. Maintain operations for at least 6,000 hours each year; c. Have a peak electricity demand exceeding 500 kilowatts; and d. Serve a critical public health or public safety function during a natural disaster or other emergency situation that may result in a widespread power outage, including a: i. Command and control center; ii. Shelter; iii. Prison or jail; iv. Police or fire station; v. Communications or data center; vi. Water or wastewater facility; vii. Hazardous waste storage facility; viii. Biological research facility ix. Hospital; or x. Food preparation or food storage facility.	• TGC 2311.002

Return to Table of Contents * See next page for additional Statutory Requirements. Abbreviations

STATUTORY REQUIREMENTS (CONTINUED)

REQUIREMENT	SUMMARY DESCRIPTION	LINKS
Exterior Lighting/Lighting Pollution (HSC 425)	A. Health and Safety Code, Title 5, Subtitle F, Chapter 425 requires outdoor lighting fixtures to be cutoff type luminaires under specific circumstances.	• HSC 425
Codes and Standards	A. The most restrictive requirements of the following codes and standards will govern: 1. NFPA 101 Life Safety Code - Latest adopted edition per SFMO (TGC 417.008(e) establishes the SFMO as the AHJ for fire safety in all state owned buildings). 2. International Code Council (ICC) family of codes (latest published editions). 3. NFPA 70: National Electrical Code (latest published edition). 4. NFPA 70E: Standard for Electrical Safety in the Workplace; 5. ASHRAE 90.1: Energy Conservation Design Standard for State-Funded Buildings or IECC (latest adopted edition per SECO); 6. Americans With Disabilities Act of 1990 (as currently amended); a. 2010 ADA Standards for Accessible Design – 2010 Standards for State and Local Governments Title II; 7. TGC Chapter 469, Elimination of Architectural Barriers; a. 2012 Texas Accessibility Standards (and Technical Memoranda). B. State of Texas properties are not subject to municipal or local codes, however TFC projects should be generally consistent with local land use practices. Cooperation with local services such as fire, watershed and utilities is advantageous to TFC projects.	• TGC 417.008 • NFPA 101 • NFPA 101 - SFMO Adoption • ICC Store • ICC Public Access • NFPA 70 (NEC) • NFPA 70E • ASHRAE Standards / Guidelines • ASHRAE 90.1 / IECC – SECO Adoption • ADA Standards • TGC 469 • TAS Standards • Architectural Barriers Technical Memoranda

Return to Table of Contents * See next page for additional Statutory Requirements. Abbreviations

STATUTORY REQUIREMENTS (CONTINUED)

REQUIREMENT	SUMMARY DESCRIPTION	LINKS
Hazardous Materials	A. Prior to demolition or construction efforts on existing facilities; a. TAC, Title 25, Part 1, Chapter 295, Subchapter C, Rule 295.34 requires building owners to: i. Survey the facility for asbestos-containing material (ACM); ii. Abate all asbestos-containing building material (ACBM) that could foreseeably be disturbed in the area to be renovated; and iii. Perform abatement in accordance with the Federal National Emission Standard for Asbestos (40 CFR, Chapter 61, Subpart M) b. Obtain certification by a licensed engineer or architect that: i. In the engineer's or architect's professional opinion, all parts of the building affected by the planned renovation or demolition do not contain asbestos." ii. Certification may be based on: (a) Current or previous surveys and reports; (b) Material safety data sheets for the materials used in (i) The original construction; and (ii) The subsequent renovations or alterations of all parts of the building affected by the planned renovation or demolition.	• TAC, 25.1, 295, C, 295.34
Uniform and Supplementary General Conditions	A. TGC Chapter 2166.302 requires TFC to adopt "...uniform general conditions to be incorporated into all building construction contracts made by the state". 1. TFC's Supplementary General Conditions modify the UGC and are required by TFC to also be incorporated into all TFC construction contracts. 2. TFC's currently adopted UGC and SGC are available on the TFC website. B. TFC has also developed Special Conditions that may be incorporated in construction contracts at the discretion of TFC. 1. TFC Special Conditions, when required, may be obtained through TFC's PM.	• TGC 2166.302 • UGC / SGC
Site Inspections	A. TGC Chapter 2166.351 - TFC is responsible for protecting the interests of the state during construction through appropriate levels of inspections, including requirements upon the PSP.	• TGC 2166.351

Return to Table of Contents Abbreviations

SUBMISSION PROCEDURES

PROCEDURE	PSP ACTIONS REQUIRED	LINKS
General	A. TFC has adopted an electronic "Round Trip" review process intended to: 1. Maximize clarity of communications between TFC and PSPs; 2. Minimize document review turn-around time; and 3. Reduce the environmental impact created by the traditional method of printing and transporting hard-copy documents. B. Submit all documentation required at each project milestone as required in this section and in the Submission Milestones and Submission Content sections below. C. Clearly indicate the appropriate Edit Date of the Guidelines / Standards applicable to the project being submitted for review.	• Round Trip Review Process • Submission Milestones
Electronic Documents (Soft Copy)	A. **Drawings:** At each submission milestone: 1. Publish, or Export drawing sheet views to "DWFX" format (do not scan or convert from PDF format); 2. Group sheets into separate files by design discipline using the following file naming convention: TFC Project Number TFC Project Name Submission Milestone Abbreviation Design Discipline Abbreviation **00-000-0000_???_???_???** Underscore B. **BIM Models (for BIM projects):** At each submission milestone: 1. Civil3D Files: a. Update the ".adsk" file(s) exported from the Building Model(s); and b. W-Block out to ".dwg" file format and submit w-blocked ".dwg" file. 2. Revit Files (Model Files Only – "PD" through "BA" Milestones): a. Review and correct all warnings. b. *"Synchronize"* all Revit *"Local Files"* with their respective *"Central Model File"* in TFC's collaboration environment; c. Export the *"Central Model File"* to ".adsk" (only for projects that require coordination with Civil3D files).	• Autodesk "*DWF Writer*" • Drawing Standards – Document Organization • BIM Standards

Return to Table of Contents * See next page for additional Submission Procedure requirements. Abbreviations

DocuSign Envelope ID: 4D7A9C98-4F30-4D1D-907E-9A92F807637B

SUBMISSION PROCEDURES (CONTINUED)		
PROCEDURE	**PSP ACTIONS REQUIRED**	**LINKS**
Electronic Documents (Soft Copy) (Continued)	3. Revit Files (Model Files Only – "RD" Milestone): a. Review and correct all warnings. b. Purge all unused elements. c. Delete all views except overall floor plans and/or overall reflected ceiling plans for each respective discipline. d. Compact and Audit the file. e. *"Synchronize"* all Revit *"Local Files"* with their respective *"Central Model File"*; f. Export to ".adsk" file format (only for projects that require coordination with Civil3D files). 4. Revit Annotation Files – Submit only ".dwfx" and ".pdf" format Drawings. D. **Specifications:** At each submission milestone: 3. Print all specification sections to ".dwfx" format (use Autodesk's free "DWF Writer" program (do not scan or convert from PDF format); 4. Group specifications into separate files by Division Number; 5. Name division files using the following file naming convention: TFC Project Number TFC Project Name Submission Abbreviation Division Number **00-000-0000_???_???_SPEC_##** Underscore E. Transmit all electronic files to TFC.	• Submission Milestones • Autodesk "*DWF Writer*" • BIM Standards
Printed Documents (Hard Copy)	A. At each submission milestone: 1. Print complete set of Drawings and Specifications; 2. Deliver complete, bound document sets to TFC's PM; and 3. Notify TFC's PM that the printed documents have been sent.	

Return to Table of Contents * See next page for additional Submission Procedure requirements. Abbreviations

SUBMISSION PROCEDURES (CONTINUED)

PROCEDURE	PSP ACTIONS REQUIRED	LINKS
Respond to Owner Comments	A. Upon receipt of TFC comments in DWFX and XLSX file formats: 1. Modify the BIM Model(s) or CADD file(s) as appropriate to address Owner comments; 2. Export revised BIM/CADD sheet views to DWFX format; and 3. Provide written responses to TFC comments in the "Response" column of the TFC Document Review Comments Log. B. Transmit all electronic files to TFC.	
SECO Compliance Form(s)	A. Submit the completed compliance certification form and supporting documentation to the PM: 1. For downloadable compliance forms, follow the link to the right (SECO's Building Codes and Standards web page).	• SECO – Texas Design Standard Compliance Forms
Energy / Water Conservation Rebates	A. Identify Federal, State, and/or Local rebate programs applicable to the project. B. Develop and submit relevant/necessary application materials to the entity(ies) offering rebates.	
Accessibility Review and Inspection	A. Register project with TDLR and pay registration fee; B. Submit proof of registration and sealed Contract Documents to an RAS within the allotted time; C. Pay the review fee; D. Respond in writing to the RAS regarding measures to be taken to address any conditions found to be non-compliant and issue a formal Addendum correcting the deficiencies; E. Schedule the accessibility inspection on or after the date of substantial completion; F. Pay the inspection fee; G. Respond in writing to the RAS regarding measures to be taken to address any conditions found to be non-compliant and issue a formal Change Proposal or directive. H. Provide TFC's PM with copies of all communications with the RAS.	• TDLR Online Registration • TDLR Fee Schedule • TDLR Document Submission Requirements
Historical Status Determination and Compliance	A. If the Project Analysis indicates a requirement for THC review and approval, submit required documentation directly to THC in a timely manner.	• THC

SUBMISSION PROCEDURES (CONTINUED)

PROCEDURE	PSP ACTIONS REQUIRED	LINKS
TCEQ Documentation	A. For projects where a SWPPP is required, submit the necessary documentation to TCEQ and pay all application and review fees.	• TCEQ
Roundtrip Review Process Diagram	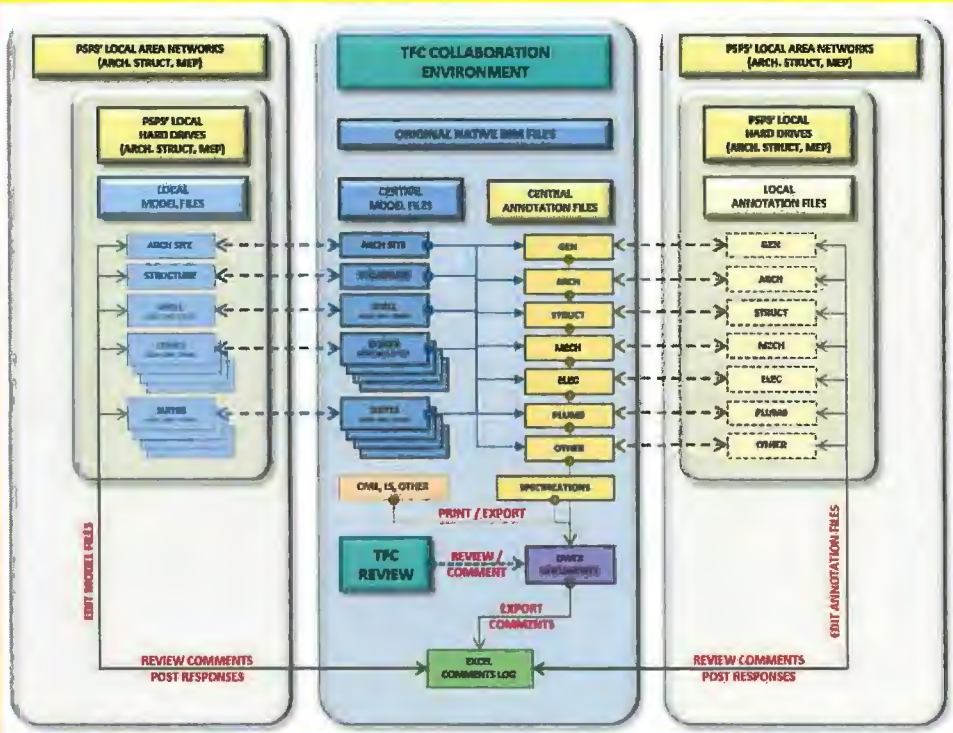	• BIM Workflow Diagram

Return to Table of Contents Abbreviations

SUBMISSION MILESTONES

PHASE	MILESTONE DESCRIPTION	SUBMISSION FORMAT
General	A. Submit documentation for Owner review at each submission milestone listed below. B. Individual project requirements (as determined by TFC) may dictate the need for fewer or additional submissions and submission format changes - confirm specific requirements with PM. C. Submission content requirements are provided in the "Submission Content" portion of this document.	
Assessment (PD)	A. PD1 (Late Phase) – If required in PSP contract: 1. Substantially complete documentation of the work required in this design phase. B. PD2 (End of Phase) – If required in PSP contract 1. Final documentation satisfactorily addressing Owner comments on previous submission.	• Number of printed and bound sets as defined in contract or as directed by PM; and • Transmit electronic files to TFC.
Initial Conceptual Drawings / Schematic Design (SD)	A. SD1 (Late Phase) – If required in PSP contract: 1. Substantially complete documentation of the work required in this design phase. B. SD2 (End of Phase) – If required in PSP contract: 1. Final documentation satisfactorily addressing Owner comments on previous submission.	• Number of printed and bound sets as defined in contract or as directed by PM; • Transmit electronic files to TFC; and • Number of mounted copies of renderings as defined in contract or as directed by PM: o Image width 24" (min.) o Board width 30" (min.)
Design Development (DD)	A. DD1 (Late of Phase): 1. Substantially complete, coordinated documentation of the work required in this design phase. B. DD2 (End of Phase): 1. Final documentation satisfactorily addressing Owner comments on previous submission.	• Number of printed and bound sets as defined in contract or as directed by PM; and • Transmit electronic files to TFC.

Return to Table of Contents
Abbreviations

SUBMISSION MILESTONES (CONTINUED)

PHASE	MILESTONE DESCRIPTION	SUBMISSION FORMAT
Contract Documents (CD)	A. CD65 (Mid-Phase): 1. In progress documentation of all work required in this design phase. 2. Submission occurs at approximately the mid-point of this design phase. 3. Satisfactorily address Owner comments on previous submissions. B. CD90 (Late Phase): 1. Substantially complete, coordinated documentation of all work required in this design phase. 2. Satisfactorily address Owner comments on previous submissions. C. CD100 (End of Phase): 1. Complete, sealed and signed, coordinated documentation of all work required in this design phase. 2. Last Submission prior to Bid Documents. 3. Satisfactorily address Owner comments on previous submissions.	• Number of printed and bound sets as defined in contract or as directed by PM; and • Transmit electronic files to TFC.
Contract Bidding and Award (BA)	A. BA - Bid Documents: 1. Satisfactorily address Owner comments on previous submission materials. 2. Complete, fully coordinated Bid Documents with: a. Professional seals affixed; and b. Signatures of all responsible design professionals. 3. Submit all necessary documentation to authorities having jurisdiction.	• Number of printed and bound sets as defined in contract or as directed by PM; and • Transmit electronic files to TFC.
Construction Phase - General Administration of Construction Contracts (CA)	A. CA – Construction Phase Documents: 1. Consolidated set of sealed / signed documents incorporating all Addenda and Clarifications issued during the bidding phase.	• Number of printed and bound sets as defined in contract or as directed by PM; • Transmit electronic files to TFC.
Warranty (RD)	A. RD – Record Documents: 1. Documentation (incorporating all Contractor's mark-ups) of as-constructed conditions.	• Number of printed and bound sets as defined in contract or as directed by PM; and • Transmit electronic files to TFC.

Return to Table of Contents Abbreviations

SUBMISSION CONTENT – ASSESSMENT (PREDESIGN - PD1 & PD2) (Abbreviated from Phase previously identified as Mobilization/Predesign)		
DOCUMENT	**PSP ACTIONS REQUIRED (Subject to PSP Contract Modifications)**	**FILE FORMAT**
General	A. Confirm or modify to reflect current project requirements and/or conditions: 1. Prior programming decisions provided by TFC such as but not limited to: a. Project Analysis; b. Construction Budget; and c. Project Schedule. 2. Other information provided by TFC: a. Existing conditions archival documents; b. Applicable codes and regulatory requirements.	
Executive Summary Report	A. Document relevant data collected, analyses performed, and design concepts and criteria recommended.	• Autodesk Design Review (.dwfx) • TFC Accepted Software Versions
Project Objective Statement	A. State whether the project follows or deviates from the Project Analysis and why.	
Project Implementation Plan	A. Outline the method by which the project will be organized and delivered: 1. BIM or CADD.	
Schedule for Delivery of Services	A. Identify all project milestones including: 1. Design Document Submission Dates and Review Periods for Owner and Jurisdictional Authorities: a. Submission; b. Review; c. Revision; and d. Authorization to Proceed. 2. Critical Meetings / Presentations; 3. Bid Package Issuance Date(s); 4. Bid Opening Date(s); 5. Construction start, punch inspection, and substantial completion; 6. Owner Move-in; and 7. Warranty Period.	

Return to Table of Contents * See next page for additional Mobilization / Pre-design Submission Content. Abbreviations

SUBMISSION CONTENT – ASSESSMENT (PREDESIGN - PD1 & PD2) (CONTINUED)

(Abbreviated from Phase previously identified as Mobilization/Predesign)

DOCUMENT	PSP ACTIONS REQUIRED **(Subject to PSP Contract Modifications)**	FILE FORMAT
Technical Requirements List	A. Submit a list of all applicable: 1. Codes and Standards; 2. Jurisdictional Authorities; 3. Utility Providers; 4. Environmental factors affecting the project design (including EPA and TCEQ fuel storage requirements); 5. Applicable TFC Technical and Design Standards (Reference the applicable Edit Date); 6. Applicable Using Agency(ies) Technical and Design Standards (Reference the applicable Edit Date).	
Existing Facilities Condition Analysis	A. Describe the condition of the existing building and / or site features as appropriate to the project: 1. Provide a list of all items to be relocated or reused; 2. Indicate all features that do not meet Programmatic or Technical Requirements; 3. Describe specific deficiencies for each non-compliant feature; and 4. Propose strategies for reconciling the deficiencies.	

Return to Table of Contents Abbreviations

SUBMISSION CONTENT – SCHEMATIC DESIGN (SD1 & SD2) (Combined with portions of Phase previously identified as Mobilization/Predesign)		
DOCUMENT	**PSP ACTIONS REQUIRED (Subject to PSP Contract Modifications)**	**FILE FORMAT**
General	A. Describe the proposed conceptual design, scale, and relationships among the major components of the Project.	
Executive Summary Report	A. Revise the previous report to reflect current project conditions. B. Include (as applicable to the project): 1. An illustration of key conceptual issues; 2. Stacking and Blocking diagrams showing efficient use of space; 3. Summary of site evaluation and regional data.	• Autodesk Design Review (.dwfx) • TFC Accepted Software Versions
Schedule for Delivery of Services	A. Revise the previous Schedule to reflect any changes to anticipated task durations and milestone dates.	
Initial Estimate of Probable Construction Cost	A. Adjust the TFC provided project budget to reflect updated program requirements with the following basis for Unit Costs: 1. Square footage calculations as measured from the SD Drawings: a. Basis for Measurement: AIA Document D101 - *Methods of Calculating the Area and Volume of Buildings;* 2. Recent comparable projects of similar function, size, construction type, level of finish, and type of mechanical and electrical system(s); 3. Adjust unit costs for local bidding climate at time of projected bid date. B. Organize the estimate according to CSI Uniformat categories; 1. Include all applicable assemblies and systems. C. Include a list of items that are: 1. Not in the contract; or 2. Supplied by others. D. Include contingencies for the following: 1. Scope escalation; 2. Development of unanticipated design elements; 3. Economic influences on cost escalation / fluctuation; and 4. Construction phase changes. E. Identify cost variances between the Estimate and the established Construction Cost Limitation; F. Propose strategies for reconciling the variances.	• Autodesk Design Review (.dwfx) • TFC Accepted Software Versions

Return to Table of Contents * See next page for additional Mobilization / Pre-design Submission Content. Abbreviations

SUBMISSION CONTENT – SCHEMATIC DESIGN (SD1 & SD2) (CONTINUED) (Combined with section previously identified as Mobilization/Predesign)		
DOCUMENT	**PSP ACTIONS REQUIRED (Subject to PSP Contract Modifications)**	**FILE FORMAT**
Technical Requirements List	A. Provide Plumbing Fixture Count Calculations based on Space Allocation Program below (if applicable to the project).	

Room Data Sheets	A. Provide the following information (as applicable to the project) for each programmed space:
	1. Structural / Physical Isolation;
	2. Hazardous Materials List (Types & Quantities);
	3. Fire Separation;
	4. Acoustical Performance;
	5. Access Control / Monitoring;
	6. Door Information:
	a. Type(s);
	b. Size(s);
	c. Material(s); and
	d. Hardware Functions.
	7. Finish Materials;
	8. HVAC;
	a. Temperature Range(s);
	b. Humidity Control;
	c. Filtering;
	9. HVAC and Lighting controls requirements;
	10. Lighting Level (Foot Candles);
	11. Electrical Power;
	12. Data / Telecommunications;
	13. Plumbing;
	14. Re-used Items; and
	15. Special Considerations.
		• Autodesk Design Review (.dwfx)
		• TFC Accepted Software Versions

Return to Table of Contents

* See next page for additional Mobilization / Pre-design Submission Content.

Abbreviations

SUBMISSION CONTENT – SCHEMATIC DESIGN (SD1 & SD2) (Combined with section previously identified as Mobilization/Predesign) (CONTINUED)		
DOCUMENT	**PSP ACTIONS REQUIRED (Subject to PSP Contract Modifications)**	**FILE FORMAT**

Layout Diagrams	A. Provide the following graphic information (as applicable to the project) for each programmed space:
	1. Diagrammatic configuration of individual and/or groups of spaces;
	2. Dimensional Requirements (absolute, minimum, and/or maximum);
	3. Partition Type(s):
	a. Height;
	b. Fire Rating; and
	c. Sound Rating.
	4. Door Location(s);
	5. Window Location(s);
	6. Furniture / Casework / Equipment / Relocated Items;
	a. Type(s) / Size(s);
	b. Location(s);
	c. Mounting Heights; and
	d. Clearance Requirements.
	7. Ceiling:
	a. Height(s); and
	b. Material(s).
	8. Lighting:
	a. Fixture Type(s) / Location(s); and
	b. Switch / Controls Type(s) / Location(s).
	9. Power / Data / Communications:
	a. Outlet Type(s) / Location(s); and
	b. Mounting Heights.
		• Autodesk Design Review (.dwfx)
		AND
		• Autodesk Autocad
		• TFC Accepted Software Versions

Adjacency & Stacking Diagrams	A. Provide 2D and 3D diagrams illustrating horizontal and vertical relationships between spaces and between departments.	• Autodesk Design Review (.dwfx)

Return to Table of Contents

* See next page for additional Mobilization / Pre-design Submission Content.

Abbreviations

SUBMISSION CONTENT – SCHEMATIC DESIGN (SD1 & SD2) (Combined with section previously identified as Mobilization/Predesign) (CONTINUED)		
DOCUMENT	**PSP ACTIONS REQUIRED (Subject to PSP Contract Modifications)**	**FILE FORMAT**
Space Allocation Program	A. Use TFC standard "Space Allocation Program" to report the following for each programmed space (if applicable to the project): 1. Provide square footages as measured from drawings below; a. Use AIA Document D101 - *Methods of Calculating the Area and Volume of Buildings*. 2. Building-wide information: a. Building Grossing Factor; b. Total Gross Building Area. 3. Departmental Information: a. Using Agency Department Name and ID Number: b. Common Areas; i. Circulation Spaces (vertical and Horizontal); ii. Maintenance and Support Spaces: (a) Restrooms and Showers; (b) Housekeeping; (c) Shipping and Receiving. iii. Building Service Spaces: (a) Mechanical; (b) Electrical; (c) Data / Communications; (d) Plumbing; 4. Space Information: a. Space Name and ID Number; b. Space Type; c. Number of occupants; d. Net area and dimensions (length, width, and ceiling height) e. Number Required. f. Total occupancy (number x occupants); g. Total Net Area (number x net area); h. Departmental Grossing Factor; i. Departmental Gross Area (factor x total net); and	• Autodesk Design Review (.dwfx) • TFC Accepted Software Versions

Return to Table of Contents * See next page for additional Mobilization / Pre-design Submission Content. Abbreviations

SUBMISSION CONTENT – SCHEMATIC DESIGN (SD1 & SD2) (CONTINUED) (Combined with section previously identified as Mobilization/Predesign)		
DOCUMENT	**PSP ACTIONS REQUIRED (Subject to PSP Contract Modifications)**	**FILE FORMAT**
BIM Model	A. Provide all BIM model and annotation files (and all linked files) containing all features of the project as indicated in the Drawing requirements below. B. See BIM Standards for more information.	• Autodesk Navisworks (.nwd and all linked .nwf files) • Autodesk Civil3D • Autodesk Revit
Drawings – SD1	A. Provide drawings describing the proposed design containing the following (as applicable to the project): 1. Project information; a. TFC Project Name and TFC Project Number; b. Project address / Location map; c. Team members; d. Drawing index; e. Submission Milestone. 2. Site: a. Existing conditions site survey; b. Property lines, setbacks, easements, and view corridor restrictions (existing and proposed including metes and bounds); c. Building locations; d. Adjacent roadways; e. Site Demolition; f. Public transportation stops; g. Vehicular and pedestrian circulation paths and parking; h. Service vehicle access; i. Landscape planting strategies; j. Basic grading and soil retention strategies; k. Pools, ponds, and other water features; l. Storm water management strategies (as applicable) for: i. Rainwater collection; ii. Drainage, Filtration, and Detention. m. Utility service locations and routing (existing and proposed);	• Autodesk Design Review (.dwfx) **AND** • Autodesk Autocad • TFC Accepted Software Versions

Return to Table of Contents * See next page for additional Mobilization / Pre-design Submission Content. Abbreviations

SUBMISSION CONTENT – SCHEMATIC DESIGN (SD1 & SD2) (CONTINUED)

(Combined with section previously identified as Mobilization/Predesign)

DOCUMENT	PSP ACTIONS REQUIRED (Subject to PSP Contract Modifications)	FILE FORMAT
Drawings – SD1 (Continued)	n. Major exterior equipment locations and sizes such as: i. Diesel generators; ii. Electrical enclosures; iii. Communications towers; and iv. Fuel storage facilities. 3. Floor Plan(s): a. Overall building configuration; b. Arrangement of programmed spaces; c. Space names and numbers coordinated with Space Allocation Program; d. Horizontal and vertical circulation elements; e. Furniture layouts; f. Roof Plan: Basic configuration; Major slopes defined; 4. Major exterior Building Elevations: a. Design vocabulary; b. Basic materials; c. Door and window openings; d. Floor-to-floor heights; e. Line of finished grade. 5. Building Section(s) as needed to illustrate unique volumetric characteristics of the proposed design. 6. MEP: a. One Line diagrams; b. Major equipment locations and sizes identified such as: i. Chillers; ii. Fire Pump; iii. Emergency Generator; iv. Automatic Transfer Switch (ATS); v. Uninterruptable Power Supply (UPS); and vi. Switchboards and Panels vii. Building Management System (BMS).	• Autodesk Design Review (.dwfx) **AND** • Autodesk Autocad • TFC Accepted Software Versions

Return to Table of Contents

* See next page for additional Mobilization / Pre-design Submission Content.

Abbreviations

SUBMISSION CONTENT – SCHEMATIC DESIGN (SD1 & SD2) (CONTINUED) (Combined with section previously identified as Mobilization/Predesign)		
DOCUMENT	**PSP ACTIONS REQUIRED (Subject to PSP Contract Modifications)**	**FILE FORMAT**
Drawings – SD1 (Continued)	8. Other drawings if needed to illustrate important design features. 9. Legends and symbols: All disciplines.	•
Drawings – SD2	A. Provide final presentation documents reflecting satisfactory responses to TFC comments regarding the SD1 documents; and B. Renderings (If applicable to the project): Photo-realistic color perspectives of the exterior of the proposed building(s) in context with their surroundings: a. One bird's-eye" view (or other view as determined by TFC); and b. One eye-level view that includes the main façade.	• Renderings: 600 DPI (.png)
Specifications	A. List primary materials and building systems: 1. Format: Outline using TFC template. B. See appendices for technical standards	• Autodesk Design Review (.dwfx)
Energy Efficient Architectural and Engineering Design Alternatives Evaluation	A. Develop in greater detail and verify results of the Energy Efficient Architectural and Engineering Design Alternatives Evaluation provided by TFC at the beginning of the Mobilization and Pre-design Phase. 1. Address all requirements of TGC Sections 2166.153, 2166.401, 2166.403, and 2166.408 such as: a. Identify and compare the benefits and disadvantages of potential alternatives including: i. Environmental impact (both initially and over the project's life cycle); ii. Economic Impact (both initially and over the project's life cycle). b. Recommend the best alternatives considering both economic and environmental life-cycle costs and benefits. 2. Determine the viability of accommodating future alternative energy system installations by providing anticipated floor space and service pathways in the current design. B. When using BIM, utilize data embedded in the BIM model in conjunction with other appropriate energy modeling software and web-based weather/energy databases to perform this analysis. 1. Modeling shall comply with ASHRAE 90.1 Appendix G Performance Rating Method or IECC (currently adopted edition).	• Autodesk Design Review (.dwfx) • TFC Accepted Software Versions

Return to Table of Contents * See next page for additional Mobilization / Pre-design Submission Content. Abbreviations

SUBMISSION CONTENT – SCHEMATIC DESIGN (SD1 & SD2) (CONTINUED) (Combined with section previously identified as Mobilization/Predesign)		
DOCUMENT	**PSP ACTIONS REQUIRED (Subject to PSP Contract Modifications)**	**FILE FORMAT**
Narratives / Analyses / Evaluations	A. Provide written analyses, assumptions, and recommendations to be included as the Basis of Design for materials, systems, equipment and energy sources for the following (as applicable to the project): 1. HVAC Systems: a. Coordination events schedule; b. Load Estimates (order of magnitude); c. Strategy for resolving conflicts between: i. Project criteria; ii. Design / Technical Standards; and iii. Code Requirements. 2. Plumbing Systems: a. Domestic and Fire water pressure and line size requirements; b. Wastewater: i. Discharge capacity; ii. Lift station requirements (if applicable). 3. Energy Sources: a. Primary Utility; b. Emergency / Standby Power; 4. Energy Conservation; a. Alternative Energy Sources b. Metering of: i. Electrical power and lighting; ii. Natural Gas; iii. Domestic, irrigation, and process water. c. Artificial lighting and daylighting systems and controls strategies; d. Energy Consumption: Anticipated total monthly building energy usage. 5. Smoke and emission control systems; 6. Fire and Life Safety systems; 7. Building Management System.	• Autodesk Design Review (.dwfx) • TFC Accepted Software Versions

Return to Table of Contents

* See next page for additional Mobilization / Pre-design Submission Content.

Abbreviations

SUBMISSION CONTENT – SCHEMATIC DESIGN (SD1 & SD2) (Combined with section previously identified as Mobilization/Predesign) (CONTINUED)		
DOCUMENT	**PSP ACTIONS REQUIRED (Subject to PSP Contract Modifications)**	**FILE FORMAT**
Narratives / Analyses (Continued	B. Recommend the most appropriate assemblies/equipment/systems that address project specific needs including: 1. Operating Concepts: Critical ideas behind the recommended design solution and the rationale which supports that solution: a. Statutory and regulatory requirements; i. Include analysis and recommendation regarding use of ASHRAE 90.1 or IECC. b. Interrelationships between spaces (both interior and exterior); c. Life safety features; d. Material and building systems selections; e. Artificial Lighting and Daylighting strategies for each type of space; f. Environmental quality (both interior and exterior); g. Emergency operations 2. Water conservation/efficiency (SECO Water Conservation Standard); 3. Foundation and Structural Frame Systems: a. Brief analysis of soils report as related to system selection; b. Comparison of benefits and disadvantages of potential systems; 4. Building Envelope: a. Brief description of existing and new building envelope assemblies (as applicable); 5. Comparison of the proposed envelope assemblies to the ASHRAE 90.1 Appendix G baseline or IECC -(currently adopted edition). 6. Indoor Air Quality and Pollutant Source Control Plan: Include specific strategies for addressing the TFC: a. Design Standards – Indoor Air Quality sections; and b. Technical Standards – 01 81 19 - Indoor Air Quality Requirements.	• Autodesk Design Review (.dwfx) • TFC Accepted Software Versions

Return to Table of Contents * See next page for additional Mobilization / Pre-design Submission Content. Abbreviations

SUBMISSION CONTENT – SCHEMATIC DESIGN (SD1 & SD2) (CONTINUED) (Combined with section previously identified as Mobilization/Predesign)		
DOCUMENT	**PSP ACTIONS REQUIRED (Subject to PSP Contract Modifications)**	**FILE FORMAT**
Narratives / Analyses (Continued)	7. MEP, Fire Alarm, Fire Protection, and Security Systems Narratives: a. Brief description of existing and new systems/conditions (as applicable); b. List of assumptions and unknowns; c. Design criteria; d. Benefits and disadvantages of potential equipment/systems: e. Comparison of the proposed systems to the ASHRAE 90.1 Appendix G baseline or IECC (currently adopted edition). i. Target Efficiency: 15% more efficient than baseline building. ii. Maximum Payback Period: 5 years. f. Address preparation of electrical breaker coordination study and NFPA 70E labeling requirements. C. Estimate above ceiling space requirements for all systems. D. List all materials / systems yet to be determined.	• Autodesk Design Review (.dwfx) • TFC Accepted Software Versions

Return to Table of Contents Abbreviations

DocuSign Envelope ID: 4D7A9C98-4F30-4D1D-907E-9A92F807637B

SUBMISSION CONTENT – DESIGN DEVELOPMENT (DD1 & DD2)		
DOCUMENT	**PSP ACTIONS REQUIRED (Subject to PSP Contract Modifications)**	**FILE FORMAT**
General	A. Illustrate and coordinate all important aspects of the Project. B. Resolve all major issues that could cause significant restudy during the CD phase.	
Executive Summary Report	A. Revise the previous report to reflect current project conditions.	• Autodesk Design Review (.dwfx) • TFC Accepted Software Versions
Schedule for Delivery of Services	A. Revise the previous Schedule to reflect any changes to anticipated task durations and milestone dates.	
Estimate of Probable Project Construction Cost	A. Revise the previous estimate based on: 1. New information regarding proposed building systems and materials; and a. Quantities take-off as measured from the DD Drawings. B. Retain the CSI Uniformat organization. C. Include the same types of contingencies as in the previous phase.	
Space Allocation Program	A. Same as SD submission content above plus the following: 1. Add room numbers (from drawings below).	
BIM Model	A. Same as SD submission content above plus the following: 1. All physical features of the project as indicated in the Drawing requirements below. 2. Prior to document submission, use conflict checking software to: a. Identify and resolve clashes between all disciplines and specialties included on the project: i. Hard clashes between the various elements; and ii. Soft clashes between any element(s) and required clearances. b. Submit the report generated by the checking software indicating that conflicts have been resolved. B. See BIM Standards for more information.	• Autodesk Navisworks (.nwd and all linked .nwf files) • Autodesk Civil3D • Autodesk Revit

Return to Table of Contents * See next page for additional Design Development Submission Content. Abbreviations

SUBMISSION CONTENT – DESIGN DEVELOPMENT (DD1 & DD2) (CONTINUED)		
DOCUMENT	**PSP ACTIONS REQUIRED (Subject to PSP Contract Modifications)**	**FILE FORMAT**
Drawings	A. Same as SD submission content above plus the following(as applicable to the project): 1. Detailed code compliance information (all disciplines); a. Reference codes; b. Jurisdictional authorities; c. Building information: i. Construction type; ii. Occupancy(ies); iii. Fire suppression systems; d. Code compliance calculations indicating both allowable/required and proposed conditions: i. Height and area; ii. Exiting; iii. Plumbing fixture count; e. Life safety plans: i. Occupant loading; ii. Exiting; f. Fire rated walls and partitions clearly identified. 2. Site: a. Accessible Route; b. Landscape planting and irrigation plans; c. Site furnishings and appurtenances; d. Planter, wall, and fence elevations; e. Grading Plan (with critical spot elevations); f. Utility Plan; g. Typical details; i. Planting; ii. Paving and hardscape; iii. Retaining walls and planters; iv. Bollards; v. Utilities. h. Parking counts;	• Autodesk Design Review (.dwfx) **AND** • Autodesk Autocad • TFC Accepted Software Versions

Return to Table of Contents * See next page for additional Design Development Submission Content. Abbreviations

SUBMISSION CONTENT – DESIGN DEVELOPMENT (DD1 & DD2) (CONTINUED)		
DOCUMENT	**PSP ACTIONS REQUIRED (Subject to PSP Contract Modifications)**	**FILE FORMAT**
Drawings (Continued)	3. Floor Plan(s): a. Room and door numbers; b. Reference keys: i. Enlarged plans; ii. Partition types; iii. Exterior and Interior elevations; iv. Building and Wall sections; and v. Plan details. c. Dimensions: i. Massing; ii. Structural Grid; and iii. Partitions. 4. Furniture layouts. 5. Roof: a. All slopes indicated; b. Major equipment locations identified; c. Major MEP penetrations coordinated; d. Reference keys: i. Building and Wall sections. 6. Exterior Building Elevations: a. All building faces; b. Material patterns; c. Vertical dimensions; d. Structural grid; e. Building section and wall section keys; 7. Major MEP penetrations coordinated. 8. Enlarged floor plans; a. Typical room layouts (as applicable to project type); b. Restrooms / Showers; c. Stairs, ramps, and elevators; and d. Other specialty spaces as appropriate to the proposed design.	•

Return to Table of Contents * See next page for additional Design Development Submission Content. Abbreviations

SUBMISSION CONTENT – DESIGN DEVELOPMENT (DD1 & DD2) (CONTINUED)		
DOCUMENT	**PSP ACTIONS REQUIRED (Subject to PSP Contract Modifications)**	**FILE FORMAT**
Drawings (Continued)	9. Interior / Millwork Elevations; 10. Door and frame information: a. Schedule (including hardware set assignments); b. Types; and c. Typical head, jamb, and sill details. 11. Hardware Schedule (to be provided in the drawing set, not in the Project Manual): a. Generic functions only: b. Basis of Design: Include in specifications. 12. Room Finish Schedule (by individual space); 13. Reflected Ceiling Plans; 14. Architectural Details (typical); 15. Structural: a. Foundation and Framing Plans; b. Loading assumptions and member sizes; c. Important details. 16. Metering: a. Meter locations; b. Types of data being metered. 17. Mechanical: a. Site information (if applicable); b. Equipment and thermostat locations; c. Primary distribution routing and sizes: d. Secondary distribution routing; e. Supply devices with CFM; f. Riser diagrams; g. Major duct penetrations (Locations and sizes); and h. Equipment selections / Schedules.	• Autodesk Design Review (.dwfx) **AND** • Autodesk Autocad • TFC Accepted Software Versions

Return to Table of Contents

* See next page for additional Design Development Submission Content.

Abbreviations

SUBMISSION CONTENT – DESIGN DEVELOPMENT (DD1 & DD2) (CONTINUED)		
DOCUMENT	**PSP ACTIONS REQUIRED (Subject to PSP Contract Modifications)**	**FILE FORMAT**
Drawings (Continued)	16. Electrical: a. Site information (if applicable); b. Equipment locations; c. Floor Plans: i. Lighting layout; ii. Lighting Footcandle Levels (interior and exterior) including tables showing: (a) Maximum, average, and minimum lighting levels; (b) Maximum-to-Average ratio; (c) Average-to-Minimum ratio. iii. Power (panel and receptacle locations); iv. Lightning Protection and Grounding; v. Data / Communications (indicating drop locations); vi. Fire Alarm (FACP and device locations); vii. Security Systems (access control, CCTV, equipment schedules). d. Riser diagrams: i. Expected panels and transformers; ii. Cable and conduit information. e. Equipment and Fixture Schedules; f. Lighting Density Schedule for main areas: Demonstrate compliance with ASHRAE 90.1 or IECC -(Currently adopted edition). 17. Plumbing and Fire Protection: a. Site information (if applicable); b. Equipment and fixture locations; i. Supply, waste, vent, and storm routing with flow rate quantities. c. Riser diagrams; d. Major piping penetrations and risers (Locations and sizes); and 18. Equipment and Fixture Schedules.	• Autodesk Design Review (.dwfx) **AND** • Autodesk Autocad • TFC Accepted Software Versions

Return to Table of Contents * See next page for additional Design Development Submission Content. Abbreviations

SUBMISSION CONTENT – DESIGN DEVELOPMENT (DD1 & DD2) (CONTINUED)		
DOCUMENT	**PSP ACTIONS REQUIRED (Subject to PSP Contract Modifications)**	**FILE FORMAT**
Specifications	A. Describe primary materials and building systems. 1. Format: Short form using TFC template. 2. Copies of manufacturers' data and/or illustrations of materials and equipment proposed to be specified for the Project. B. See appendices for technical standards. C. Manufacturers' Data Sheets: 1. Lighting Fixtures; 2. Lighting Controls; 3. Lamps (identify proposed lamp temperatures)	• Autodesk Design Review (.dwfx) • TFC Accepted Software Versions
Narratives / Analyses / Evaluations	A. Revise narratives and analyses submitted in the previous phase: 1. Summarize decisions made (and supporting reasons) for each. B. Identify possible impacts of Construction phasing on Design strategies.	
Data / Calculations	A. Provide data and calculations for the following: 1. Building Envelope Comcheck confirming compliance with ASHRAE 90.1 or IECC (currently adopted edition). 2. MEP Equipment List: a. Location(s), Size(s), and Weight(s); b. Clearance requirements. 3. Mechanical: a. Load analysis summary; b. Building pressure air quantity summary: i. Exhaust; ii. Outside Air; iii. Required occupant ventilation. c. Sequence of operations for major equipment and BMS criteria; d. Electrical Load analysis summary (include schedules documenting the sizing of the system / equipment). e. Lighting Comcheck confirming compliance with ASHRAE 90.1 or IECC (currently adopted edition). 4. Plumbing and Fire Protection: Flow test (capacity and pressure).	

Return to Table of Contents
Abbreviations

DocuSign Envelope ID: 4D7A9C98-4F30-4D1D-907E-9A92F807637B

SUBMISSION CONTENT – CONTRACT DOCUMENTS (CD65, CD90, & CD100)		
DOCUMENT	**PSP ACTIONS REQUIRED (Subject to PSP Contract Modifications)**	**FILE FORMAT**
General	A. Develop detailed and coordinated documents setting forth the requirements for the construction of the project.	
Executive Summary Report	A. Revise the previous report to reflect current project conditions.	• Autodesk Design Review (.dwfx) • TFC Accepted Software Versions
Schedule for Delivery of Services	A. Revise the previous Schedule to reflect any changes to anticipated task durations and milestone dates.	
Estimate of Probable Project Construction Cost	A. Revise the previous estimate based on: 1. New information regarding proposed building systems and materials; and 2. Detailed quantities take-off (measured from Drawings below). B. Change to the CSI MasterFormat 2004/2016 format; C. Include the same types of contingencies as in the previous phase.	
Space Allocation Program	A. Same as DD submission content above.	
BIM Model	A. Same as DD submission content above; and B. All physical features of the project as indicated in the Drawing requirements below. C. See BIM Standards for more information.	• Autodesk Navisworks (.nwd and all linked .nwf files) • Autodesk Civil3D • Autodesk Revit

Return to Table of Contents * See next page for additional Contract Document Submission Content. Abbreviations

SUBMISSION CONTENT – CONTRACT DOCUMENTS (CD65, CD90, & CD100) (CONTINUED)

DOCUMENT	PSP ACTIONS REQUIRED (Subject to PSP Contract Modifications)	FILE FORMAT
Drawings	A. Same as DD submission content above plus the following (as applicable to the project): 1. Site: a. Erosion and Sedimentation Control (plan and details); b. Fire Protection Plan; c. Accessible Signage; d. Dimensions; e. Additional detailing as appropriate for the project needs; f. Grading Plan (with all spot elevations); g. Landscape planting and irrigation details; h. Impervious cover calculations; and i. Utility profiles. 2. Floor Plan(s): a. Dimensions (all); and b. Furniture layouts moved to Furniture Plans (for reference only). 3. Roof: a. All equipment and walk pad locations; b. Safety tie-backs (if applicable); and c. Detail reference keys. 4. Architectural Details (all); 5. Structural: All remaining notes, plans, schedules, and details; 6. Mechanical: a. Equipment and fan room layouts; b. All ductwork routing and sizes; c. Fire and smoke dampers; d. Equipment Schedules; e. Flow and control diagrams; f. All remaining drawings, notes, schedules, and details.	• Autodesk Design Review (.dwfx) AND • Autodesk Autocad • TFC Accepted Software Versions

Return to Table of Contents

* See next page for additional Contract Document Submission Content.

Abbreviations

SUBMISSION CONTENT – CONTRACT DOCUMENTS (CD65, CD90, & CD100) (CONTINUED)		
DOCUMENT	**PSP ACTIONS REQUIRED (Subject to PSP Contract Modifications)**	**FILE FORMAT**
Drawings (Continued)	1. Electrical / Fire Alarm: a. Electrical details showing such things as: i. Grounding; ii. ATS; iii. Wiring; iv. Lightning protection; v. Fencing; and vi. Housekeeping pads. b. All remaining notes, plans, schedules, and details. 2. Plumbing / Fire Protection: a. Equipment and pump room layouts; b. All piping routing and sizes; c. Fixture and Equipment Schedules; d. Flow and riser diagrams; e. Fire sprinkler hazard zones; f. Fire hydrant static and residual pressures: i. Indicate fire and / or domestic water pump requirements. B. All remaining notes, plans, schedules, and details.	• Autodesk Design Review (.dwfx) **AND** • Autodesk Autocad • TFC Accepted Software Versions
Specifications	A. Provide complete Project Manual: 1. Format: 3 part CSI MasterFormat 2004/2016. 2. Include all TFC Front-End documents as provided by TFC's PM. 3. Include the following TFC-provided matrices at the end of the Project Close Out section of the Project Manual and complete them to reflect project specific requirements: a. Submittals; b. Warranties; c. Testing; d. Training; and e. Manuals. B. See the Appendices for relevant technical standards.	• Autodesk Design Review (.dwfx)

Return to Table of Contents * See next page for additional Contract Document Submission Content. Abbreviations

SUBMISSION CONTENT – CONTRACT DOCUMENTS (CD65, CD90, & CD100) (CONTINUED)

DOCUMENT	PSP ACTIONS REQUIRED (Subject to PSP Contract Modifications)	FILE FORMAT
Narratives / Analyses / Evaluations	A. Revise narratives and analyses submitted in the previous phase: 1. Summarize decisions made (and supporting reasons) for each. B. Update the DD MEP systems narratives to indicate intended operational and maintenance procedures (for building occupants). 1. Address requirements of ASHRAE Standard 180 - Standard Practice for Inspection and Maintenance of Commercial Building HVAC Systems. C. Estimate to what extent structural, building envelope, & hardscape materials need to be replaced or repaired.	• Autodesk Design Review (.dwfx) • TFC Accepted Software Versions
Data / Calculations	A. Same as DD submission content above and indicate the following: 1. Room by room electrical load analysis per ASHRAE 90.1 or IECC (currently adopted edition); 2. Changes from previous submission; 3. Duct and piping calculations; 4. Air balance calculations; 5. Energy and ventilation calculations.	

Return to Table of Contents Abbreviations

SUBMISSION CONTENT – CONTRACT BIDDING AND AWARD (BA)		
DOCUMENT	**PSP ACTIONS REQUIRED (Subject to PSP Contract Modifications)**	**FILE FORMAT**
General	A. Execute and issue bid documents that form the basis of competitive price proposals.	
Executive Summary Report	A. Revise the previous report to reflect current project conditions.	• Autodesk Design Review (.dwfx) • TFC Accepted Software Versions
Schedule for Delivery of Services	A. Revise the previous Schedule to reflect any changes to anticipated task durations and milestone dates.	
Space Allocation Program	A. Same as DD submission content above.	• Autodesk Design Review (.dwfx)
Bid Documents	A. Provide final, executed (sealed and signed): 1. Drawings and Specifications reflecting satisfactory responses to TFC comments; and 2. Addenda and Clarifications as required to sufficiently respond to: a. Requirements of regulatory authorities; b. Bidder Requests for Information; and c. Requests for Substitution.	• Autodesk Design Review (.dwfx) **AND** • Autodesk Autocad • TFC Accepted Software Versions
BIM Models	A. Provide all BIM model and annotation files (and all linked files) reflecting the information contained within the Bid Documents as described below. B. See BIM Standards for more information.	• Autodesk Navisworks (.nwd and .nwf files) • Autodesk Civil3D • Autodesk Revit
Narratives / Analyses / Evaluations	A. Revise narratives and analyses submitted in the previous phase: 1. Summarize decisions made (and supporting reasons) for each.	

Return to Table of Contents * See next page for additional Contract Bidding and Award Submission Content. Abbreviations

SUBMISSION CONTENT – CONTRACT BIDDING AND AWARD (BA) (CONTINUED)		
DOCUMENT	**PSP ACTIONS REQUIRED (Subject to PSP Contract Modifications)**	**FILE FORMAT**
Data / Calculations	A. Same as CD submission content above.	
SECO Documentation	A. Submit sealed and executed SECO compliance forms and supporting documentation in accordance with SECO requirements and the Submission Procedures section of this document.	
Accessibility Review	A. Register project and submit documentation to TDLR or a RAS in accordance with the TDLR requirements and the Submission Procedures section of this document.	
Hazardous Materials Certification	A. Submit letter (complying with the hazardous materials statutory requirements listed above) certifying that the project and all parts of any building(s) affected by the project do not contain asbestos.	• Adobe PDF
TCEQ / EPA Documentation	A. Submit: 1. SWPPP complying with TAC Title 30, Part 1, Chapter 213, Subchapter B, RULE §213.24. 2. SPCC Plan (EPA) for fuel storage tanks; 3. Fuel storage tank registration (TCEQ).	• As required by TCEQ and/or EPA

Return to Table of Contents Abbreviations

SUBMISSION CONTENT – CONSTRUCTION (CA)

DOCUMENT	PSP ACTIONS REQUIRED (Subject to PSP Contract Modifications)	FILE FORMAT
Schedule for Delivery of Services	A. Revise the previous Schedule to reflect any changes to anticipated task durations and milestone dates.	• Autodesk Design Review (.dwfx)
Consolidated Contract Documents	A. Provide final, executed (sealed and signed) Drawings and Specifications updated to reflect all revisions including Addenda and Clarifications issued during the Contract Bidding and Award phase.	• Autodesk Design Review (.dwfx) **AND** • Autodesk Autocad • TFC Accepted Software Versions
BIM Model and Annotation Files	A. Provide all BIM model and annotation files (and all linked files) reflecting the information contained within the Consolidated Contract Documents as described above; B. See BIM Standards for more information.	• Autodesk Navisworks (.nwd and .nwf files) • Autodesk Civil3D • Autodesk Revit
Change Documentation	A. Provide final, executed (sealed and signed) Change Documentation including Drawings and Specifications reflecting agreed upon changes to the Contract for Construction such as: 1. Minor Changes / Supplemental Instructions (UGC 11.4) such as those resulting from: a. Modifications to shop drawings and other submittals; b. RFI responses. 2. Changes resulting from unforeseen concealed conditions (UGC 11.5); and 3. Change Orders.	• Autodesk Design Review (.dwfx) • TFC Accepted Software Versions

Return to Table of Contents Abbreviations

SUBMISSION CONTENT – CONSTRUCTION (CA)		
DOCUMENT	**PSP ACTIONS REQUIRED (Subject to PSP Contract Modifications)**	**FILE FORMAT**
Record Documents	A. Update Drawings and specifications to reflect the "as-constructed" condition of the complete scope of the project as recorded in Contractor's as-constructed field marked Record Documents and all: 1. Addenda; 2. Clarifications; 3. Minor Changes / Supplemental Instructions (UGC 11.4) such as those resulting from: a. Modifications to shop drawings and other submittals; b. RFI responses. 4. Changes resulting from unforeseen concealed conditions (UGC 11.5); 5. Change Orders; and 6. Product, material, and equipment substitutions. B. Finalize the MEP Systems Operations Manual. 1. Comply with ASHRAE Guideline 0, Informative Annex O.	• Autodesk Design Review • (.dwfx) • **AND** • Autodesk Autocad • TFC Accepted Software Versions • **AND** • Microsoft Word 2007 • TFC Accepted Software Versions
Record BIM Models	A. Update all BIM model and annotation files (and all linked files) to reflect the information contained within the Record Documents as described above. B. Tag all components in the BIM models with embedded hyperlinks to the relevant: 1. Specification section in the Project Manual; 2. Product / Equipment Information in the O&M Manual; 3. Final, accepted Submittal Data; 4. Training Materials; 5. Commissioning Documentation; 6. Systems Manuals; and 7. Warranty Documents. C. See BIM Standards for more information.	• Autodesk Navisworks (.nwd and .nwf files) • Autodesk Civil3D • Autodesk Revit

Return to Table of Contents Abbreviations

DRAWING STANDARDS – RECOMMENDED DOCUMENT ORGANIZATION

Purpose

A. Facilitate familiarity of the document structure and contents by all parties.
B. Deviations from the recommended document organization standards (when appropriate) must receive prior written approval from TFC's PM.

Drawing Numbering:
A. Begin numbering in the bottom right corner.
B. Continue numbering upward and then to the left.

	9	6	3	
	8	5	2	
	7	4	1	

Keyed Notes) TFC prohibits the use of the Con-Doc keyed notes system.

Detail Manuals: TFC prohibits the use of Detail Manuals. All details are to be included in the Drawings.
Door Hardware Schedule: Locate in drawings not Project Manual.

DESIGN DISCIPLINE	General (Notes, Abbreviations, and Symbols)	Existing / Demolition	PLANS			ELEVATIONS			SECTIONS				SCHEDULES	DIAGRAMS
			Plan	Enlarged Plan	Plan Detail	Elevation	Enlarged Elevation	Elevation Detail	Section	Enlarged Section	Section Detail	Enlarged Section Detail		
	0	1	2	3	4	5	6	7	8	9	10	11	12	13
Cover	G0-00													
Project Information	G0-01													
Accessibility	AR-01...													
Code Review	CR-01...													
General Notes														
Civil	C0-00	C1-100	C2-100	C3-100	C4-100				C8-100				C12-100	C13-100
Dimension Control		C1-200	C2-200	C3-200	C4-200				C8-200				C12-200	C13-200
Erosion / Sedimentation		C1-300	C2-300	C3-300	C4-300				C8-300				C12-300	C13-300
Grading		C1-400	C2-400	C3-400	C4-400				C8-400				C12-400	C13-400
Storm Water		C1-500	C2-500	C3-500	C4-500				C8-500				C12-500	C13-500
Utilities		C1-600	C2-600	C3-600	C4-600				C8-600				C12-600	C13-600
Landscape	L0-000	L1-100	L2-100	L3-100	L4-100	L5-100	L6-100	L7-100	L8-100	L9-100	L10-100	L11-100	L12-100	
Hardscape		L1-200	L2-200	L3-200	L4-200	L5-200	L6-200	L7-200	L8-200	L9-200	L10-200	L11-200	L12-200	L13-200
Planting		L1-300	L2-300	L3-300	L4-300				L8-300	L9-300	L10-300	L11-300	L12-300	L13-300
Irrigation		L1-400	L2-400	L3-400	L4-400				L8-400	L9-400	L10-400	L11-400	L12-400	L13-400
Structural	S0-000	S1-100	S2-100	S3-100	S4-100	S5-100	S6-100	S7-100	S8-100	S9-100	S10-100	S11-100	S12-100	S13-100
Architecture	A0-000	A1-100	A2-100	A3-100	A4-100	A5-100	A6-100	A7-100	A8-100	A9-100	A10-100	A11-100	A12-100	
Site		A1-200	A2-200	A3-200	A4-200	A5-200	A6-200	A7-200	A8-200	A9-200	A10-200	A11-200	A12-200	
Floor / Roof		A1-300	A2-300	A3-300	A4-300	A5-300	A6-300	A7-300	A8-300	A9-300	A10-300	A11-300	A12-300	
Openings													A12-400	
Ceiling		A1-500	A2-500	A3-500	A4-500	A5-500	A6-500	A7-500	A8-500	A9-500	A10-500	A11-500	A12-500	
Wall		A1-600	A2-600	A3-600	A4-600	A5-600	A6-600	A7-600	A8-600	A9-600	A10-600	A11-600	A12-600	

Return to Table of Contents * See next page for additional Recommended Document Organization Standards. Abbreviations

DRAWING STANDARDS – RECOMMENDED DOCUMENT ORGANIZATION (CONTINUED)

DESIGN DISCIPLINE	General (Notes, Abbreviations, and Symbols)	Existing / Demolition	PLANS			ELEVATIONS			SECTIONS				SCHEDULES	DIAGRAMS
			Plan	Enlarged Plan	Plan Detail	Elevation	Enlarged Elevation	Elevation Detail	Section	Enlarged Section	Section Detail	Enlarged Section Detail		
	0	1	2	3	4	5	6	7	8	9	10	11	12	13
Interior	I0-000	I1-100	I2-100	I3-100	I4-100	I5-100	I6-100	I7-100	I8-100	I9-100	I10-100	I11-100	I12-100	
Floor		I1-200	I2-200	I3-200	I4-200	I5-200	I6-200	I7-200	I8-200	I9-200	I10-200	I11-200	I12-200	
Ceiling		I1-300	I2-300	I3-300	I4-300	I5-300	I6-300	I7-300	I8-300	I9-300	I10-300	I11-300	I12-300	
Wall		I1-400	I2-400	I3-400	I4-400	I5-400	I6-400	I7-400	I8-400	I9-400	I10-400	I11-400	I12-400	
Casework		I1-500	I2-500	I3-500	I4-500	I5-500	I6-500	I7-500	I8-500	I9-500	I10-500	I11-500	I12-500	
Finishes		I1-600	I2-600	I3-600									I12-600	
Furniture		I1-700	I2-700	I3-700	I4-700	I5-700	I6-700	I7-700	I8-700	I9-700	I10-700	I11-700	I12-700	
Signage		I1-800	I2-800	I3-800	I4-800	I5-800	I6-800	I7-800	I8-800	I9-800	I10-800	I11-800	I12-800	
Mechanical	M0-000	M1-100	M2-100	M3-100	M4-100				M8-100				M12-100	M13-100
Piping		M1-200	M2-200	M3-200	M4-200				M8-200				M12-200	M13-200
Building Automation & Contr	BA-000	BA1-100	BA2-100	BA3-100	BA4-100				BA8-100				BA12-100	BA13-100
Electrical	E0-000	E1-100	E2-100	E3-100	E4-100				E8-100				E12-100	E13-100
Power		E1-200	E2-200	E3-200	E4-200				E8-200				E12-200	E13-200
Lighting		E1-300	E2-300	E3-300	E4-300				E8-300				E12-300	E13-300
Fire Alarm		E1-400	E2-400	E3-400	E4-400				E8-400				E12-400	E13-400
Mechanical		E1-500	E2-500	E3-500	E4-500				E8-500				E12-500	E13-500
Tele/Data	TD0-000	TD1-100	TD2-100	TD3-100	TD4-100				TD8-100	TD9-100	TD10-100	TD11-100	TD12-100	TD13-100
Security	SC-000	SC1-100	SC2-100	SC3-100	SC4-100	SC5-100			SC8-100				SC12-100	SC13-100
Plumbing	P0-000	P1-100	P2-100	P3-100	P4-100				P8-100				P12-100	P13-100
Fire Protection	FP0-000	FP1-100	FP2-100	FP3-100	FP4-100				FP8-100				FP12-100	FP13-100
Food Service	FS0-000	FS1-100	FS2-100	FS3-100	FS4-100	FS5-100	FS6-100	FS7-100	FS8-100	FS9-100	FS10-100	FS11-100	FS12-100	FS13-100
Other	??0-000	??1-100	??2-100	??3-100	??4-100	??5-100	??6-100	??7-100	??8-100	??9-100	??10-100	??11-100	??12-100	??13-100

Partition Types	A. See Partition Types information in BIM Standards.	• TFC Partition Types
Door Types	A. See Door Types information in BIM Standards.	• TFC Door Types
Room Styles	A. See Revit Room Styles information in BIM Standards.	• TFC Room Styles
Materials Designations	A. See Revit Materials information in BIM Standards.	• TFC Materials

Return to Table of Contents Abbreviations

DocuSign Envelope ID: 4D7A9C98-4F30-4D1D-907E-9A92F807637B

BIM / CADD STANDARDS – OVERVIEW

		LINKS
General	A. TFC has adopted Building Information Modeling (BIM) as a standard for all projects developed under TFC authority involving new construction and additions. B. For deferred maintenance and minor alteration projects, Building Information Modeling (BIM) is preferred but not necessarily required. 1. CADD software may be used only with prior written authorization from TFC's PM and TFC's IAECS Director.	• BIM Standards • CADD Standards • TFC Accepted Software Versions
Purpose	A. Facilitate implementation of TFC standards; B. Minimize document review turn-around time through standardization of: 1. Elements common to all TFC projects: 2. Format and organization of documents. C. Streamline TFC facilities management and maintenance processes from the date of occupancy through the life of the property.	
Software Requirements	A. **All BIM Model files and CADD files are required to be created using BIM or CADD authoring software in native file formats readable by the current software versions in use by TFC as indicated below:** 1. Autodesk Autocad – All versions through 2017 2. Autodesk Civil 3D - All versions through 2017 3. Autodesk Navisworks- 2017 4. Autodesk Revit - 2017 5. Autodesk Collaboration for Revit (C4R) - 2017 B. PSPs are responsible for providing proper software training for their staff members assigned to TFC projects.	• Autodesk Autocad • Autodesk Civil 3D • Autodesk Navisworks • Autodesk Revit • Autodesk Collaboration for Revit
BIM Team Collaboration	A. TFC will provide a cloud-based team collaboration environment for all project related BIM files as defined later in this document. B. PSPs will develop BIM files in TFC's collaboration environment in accordance with TFC's BIM standards.	• BIM Standards • BIM Standards – File Types

Return to Table of Contents Abbreviations

CADD STANDARDS

STANDARD	DESCRIPTION	LINKS
Purpose	A. Provide a uniform format for CADD based projects developed under TFC authority.	
Template Files	A. The following standard files will be provided by TFC: 1. Cover Sheet; 2. Blank titleblock; 3. Partition Types and Details; and 4. Door Types Legend.	• TFC ACAD Template Files • TFC Partition Types • TFC Door Types
Existing Conditions Files	A. In cases of facility renovation projects, a copy of the existing CADD drawing files and associated Record Documentation will be made available for download through the project's IMPACT folder structure. B. These files and documents shall be utilized in the preparation of all related design and contract documents.	
Accuracy	A. All CAD drawings shall be drafted using precision input employing the most accurate source material available. B. For all drawing entities, zero tolerance is required: 1. All lines meet at intersections; 2. Straight lines are straight; 3. Blocks are inserted properly without overlap; 4. Closure of all polygons, etc.	

Return to Table of Contents * See next page for additional CADD Standards. Abbreviations

CADD STANDARDS (CONTINUED)

STANDARD	DESCRIPTION	LINKS
Color	A. Color will be used to control pen assignments and line weights. B. Select layer colors in accordance with the "Pen / Color Values Table". C. Create all objects with color bylayer.	
Linetypes	A. Use only standard linetypes. B. Contour lines, dashed lines and other fonted lines shall be made of one continuous line segment, not a series of separate line segments. C. A sample drawing must be submitted and approved by the CAD Manager if multilines are used.	
Units	A. Set DDUNITS to architectural and angles to deg/min/sec with the precision set at 1/16"	
Blocks	A. Any graphic entity that occurs repeatedly in drawings should be made into a block. B. Insertion points for blocks shall be consistent with its placement in the drawing 1. Keep names simple and descriptive. 2. Use a logical insertion point (center of circle, bottom left corner of object). 3. Blocks must be drawn on layer 0 and inserted on the proper layer; or drawn on the proper layer/ layers and inserted on layer 0. C. Nested blocks are permitted but should be avoided whenever possible. D. If custom nested blocks are used, TFC's CADD Manager must approve them.	
External Reference Files (XRefs)	A. Bind (do not insert) all reference files into the active file.	
Scale	A. All model space files must be drawn at real size (1-to-1). B. Objects must be created at full size: 1. A 50-foot wall must be drawn to 50 feet 0"; and 2. A 48-inch column must be drawn to 48 inches. C. **CAD files will be drawn in 2D only (not 3D).**	

Return to Table of Contents * See next page for additional CADD Standards. Abbreviations

CADD STANDARDS (CONTINUED)

STANDARD	DESCRIPTION	LINKS
Text and Fonts	A. Use only standard text fonts supplied with AutoCAD's font library. B. Fonts for lettering shall be readable and plottable by AutoCAD with no additional software required. C. Text size must be legible and appropriate to the graphic information presented and the intended plotted scale of the drawing.	
Drawing Origin	A. The lower left corner of the building shall be placed at 0,0,0. B. For non-rectilinear buildings a logical origin point shall be established. C. The origin point must remain consistent between all model files for the purpose of xref coordination. D. **Once the origin is established, it may not be changed.**	
Dimensions	A. All dimensioning shall be associative. 1. Break lines and parts of cut-through views are an exception. B. Preferred dimension styles are provided in the template file.	
Hatching	A. Use pattern hatching sparingly since the practice significantly increases the AutoCAD entity count of a drawing. B. Associative hatching may be used only with the approval of TFC's CAD Manager. C. Use the solid command or polyline command to represent solid-filled regions when possible.	
Layers	A. CADD drawings shall be organized in accordance with the TFC Layering Guidelines. 1. If the TFC format does not include an appropriate layer name, layer names shall be in accordance with CAD Layer Guidelines as published by the American Institute of Architects (A.I.A.). B. The layer names shall be the long format and shall include the modifier. C. As these layer guidelines allow flexibility in the assignment of layers, a Layer Matrix shall be provided to TFC with the Record Documents. D. All third party add on application packages which modify or create CAD layers or other entities must comply with the AIA CAD Layer Guidelines.	

Return to Table of Contents * See next page for additional CADD Standards. Abbreviations

CADD STANDARDS (CONTINUED)

STANDARD	DESCRIPTION	LINKS
Area Calculations	A. Include the following area calculations using area polylines included in the "as-built" submittal. 1. Construction Area – Area calculation boundary line will be drawn around the exterior Floor Plan for each level of building on layer **a-area-cons** 2. Gross Area - Area calculation boundary line will be drawn around interior Floor Plan for each level of building on layer **a-area-gros** 3. Room Area - Area calculation boundary line will be drawn around each room from the centerline of the wall on layer **a-area-room** B. Wall edges, partition centerlines and structural centerlines used for area polygons, should be saved in the layers listed above, as appropriate.	
Quality Check	A. Check the CADD files to verify the following: 1. All entities are: a. Dimensionally accurate; b. Inserted on the proper layer; 2. Column and grid line dimensions are correct; 3. Entity intersections meet each other properly; 4. Entities outside the drawing limits are deleted. 5. Colors and linetypes are assigned BYLAYER; 6. Layering system conforms to TFC and AIA CAD Layer Standard. B. Correct any non-compliant conditions. C. Confirm that all files are free of viruses.	
Purge / Audit	A. If the drawing file becomes too large, response to commands will be slow and regeneration times will be longer. B. Prior to submitting files: 1. Purge all unused blocks, linetypes and layers. 2. Audit all files and "Fix All Errors".	

Return to Table of Contents
Abbreviations

BIM STANDARDS – FILE TYPES		
FILE TYPE	**DEFINITION**	**LINKS**
Purpose	A. Facilitate the effective and efficient implementation of BIM in the design and documentation of projects within TFC's jurisdictional authority. B. Allow for dynamic, simultaneous modifications of multiple portions of any given facility (by both internal and external service providers). C. Maintain an accurate, current, easily accessible record of the existing condition of all facilities even while proposed design and/or construction modifications are underway.	
General	A. There are two types of files for a TFC project: 1. **Model Files** contain all physical features of the project; a. Existing conditions to remain; i. The extent of existing conditions modeling required beyond the affected areas and the level of information to be included will be determined based on project-specific needs. b. Existing conditions to be removed; c. Proposed new construction; and d. All elements tagged with CSI Uniformat Level 4 categories. e. Annotations such as working dimensions, tags, and other annotation elements utilized for purposes other than formal documentation may be incorporated in the model files but must be purged prior to submitting final deliverable to TFC. 2. **Annotation Files** contain all non-physical formal documentation information (such as title blocks, notes, dimensions, details, schedules, etc.) describing the physical features contained in the model files. 3. All drawings and schedules required for assessment, review, bidding and construction shall be extractions from the model file(s). B. Separating the project into model and annotation files is intended to: 1. Limit the size of the "*Central File*"; 2. Maximize workflow efficiency; and 3. Protect discipline specific work from unauthorized modification.	• BIM Standards (Workflow Diagram)

Return to Table of Contents * See next page for additional BIM Workflow Diagram. Abbreviations

BIM STANDARDS – WORKFLOW DIAGRAM

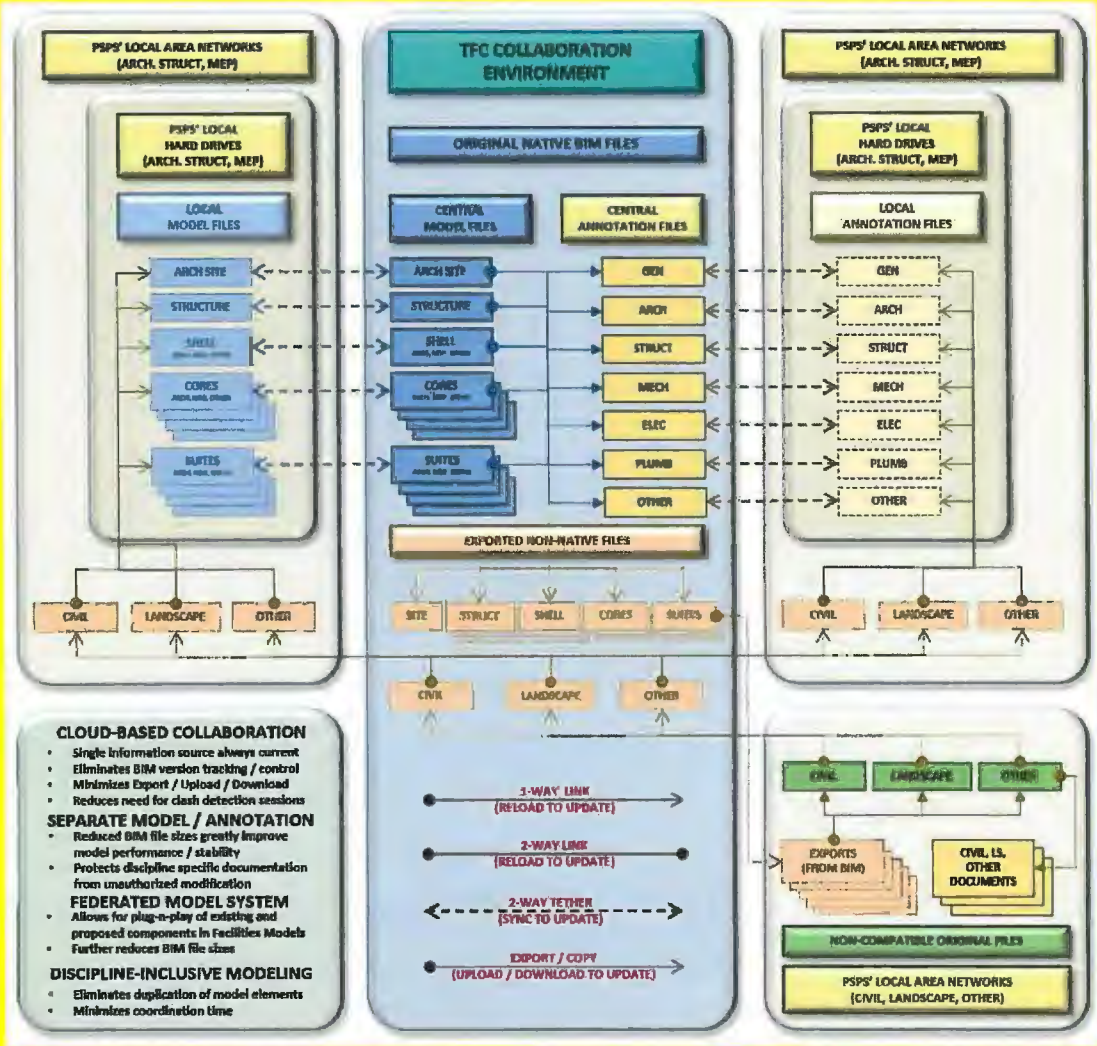

Return to Table of Contents

* See next page for additional BIM File Types.

Abbreviations

BIM STANDARDS – FILE TYPES (CONTINUED)

FILE TYPE	DEFINITION	LINKS
Model Types	A. Each TFC facility has (or will have) a Federated system of Models linked together to create a unified whole: B. **Master Models:** Contain no native model elements, but are a conglomeration of Linked Component Models: 1. The various types of Master Models are: a. Campus Master Model; b. Site Master Models; and; c. Building Master Model. C. **Component Models** are discrete subsets of the larger facility containing native elements (from all disciplines) representing all physical features within the Component Model's clearly defined scope boundaries. 1. Each is linked into the Master Model and other relevant Component Models with "Origin to Origin" positioning. 2. No model objects are duplicated between the various Component Models. 3. The various types of Component Models are: a. Site Component Models; and b. Building Component Models D. Each Model has (or will have) multiple copies: 1. **Current Conditions Models**: a. Reflect the actual, current state of the facility; b. Are linked into the relevant Master Model; and c. Are located on TFC's local area network.. 2. **Project Copy Models**: a. Reflect proposed modifications for each unique and on-going project b. Are NOT linked into the Master Models. c. Are copied from the relevant Current Conditions Models at the beginning of any given project; d. Are hosted in TFC's cloud-based collaboration environment and provided to PSP by invitation from TFC.	

Return to Table of Contents * See next page for additional BIM File Types. Abbreviations

BIM STANDARDS – FILE TYPES (CONTINUED)

FILE TYPE	DEFINITION	LINKS
Model Types (Continued)	3. **Archive Copy Models** are saved as a record of previous conditions. After Record Document changes are recorded in the Project Copy Models: a. Each Current Conditions Model is copied to the appropriate archive folder on TFC's network; and b. Each recently completed Record Model will be copied back into the Current folder on TFC's network and replaces its respective Current Conditions Model.	
Campus Master Models	A. Contain linked Building Component Model(s) and Site Component Model(s). B. **File naming convention:** 1. Current Conditions Model: **(Facility Abbreviation)_MODEL_CAMPUS_YYYY (Revit Version)** 2. Proposed Modifications Models: **(Facility Abbreviation) _(PRJ #)_MODEL_CAMPUS_YYYY (Revit Version)**	
Site Component Models	A. Contain all physical and regulatory features of portions of the facility's site: 1. Property Lines; 2. Easements and setbacks; 3. Topography; 4. Roadways; 5. Parking; 6. Walkways; 7. Site Utilities (terminate 5 feet from building face); 8. Walls and Fences; 9. Site Furnishings; 10. Landscape Planting; 11. Drainage Structures; B. **File naming convention:** 1. Current Conditions Model: **(Facility Abbreviation)_MODEL_SITE_YYYY (Revit Version)** 2. Proposed Modifications Models: **(Facility Abbreviation) _(PRJ #)_MODEL_SITE_YYYY (Revit Version)**	

Return to Table of Contents * See next page for additional BIM File Types. Abbreviations

BIM STANDARDS – FILE TYPES (CONTINUED)

FILE TYPE	DEFINITION	LINKS
Building Master Models	A. Contain linked Building Component Models. B. **File naming convention:** 1. Current Conditions Model: **(Building Abbreviation)_MODEL_MASTER_YYYY (Revit Version)** 2. Proposed Modifications Models: Not Applicable	
Building Component Models	A. Contain all physical features of the relevant Building Components as defined later in this document. B. There are 4 types of Building Component Models: 1. Structural Model (one per building); 2. Building Shell Model (one per building); 3. Core Model (one per floor); and 4. Suite (Tenant Space) Model (one per suite). C. Shade Structures and pavilions are to be treated as independent buildings.	
Structural Component Models 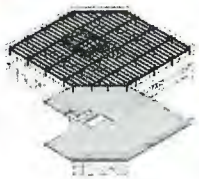	A. Contain All physical features of the building structure **(one file per building)**: 1. Structural Grid; 2. Foundations; 3. Structural Floors; 4. Structural Walls; and 5. Structural Framing. B. **File naming convention:** 1. Current Conditions Model: **(Facility Abbreviation)_MODEL_STRUCT_YYYY (Revit Version)** 2. Proposed Modifications Models: **(Facility Abbreviation)_(PRJ #)_MODEL_STRUCT_YYYY (Revit Version)**	

Return to Table of Contents * See next page for additional BIM File Types. Abbreviations

BIM STANDARDS – FILE TYPES (CONTINUED)

FILE TYPE	DEFINITION	LINKS
Building Shell Component Models 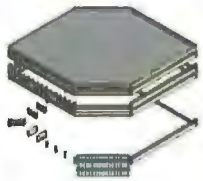	A. Contain all Architectural and MEP features of the exterior building envelope and vertical building systems/components **(one file per building)**: 1. Exterior Walls; 2. Exterior Openings; 3. Awnings and canopies; 4. Roof Systems; 5. Vertical Circulation Elements (including shaft walls, openings, and opening protective devices); 6. Building-wide MEP equipment and distribution systems (including shaft walls, openings, and opening protective devices) - Terminate Mechanical, Electrical, and Plumbing systems using a "System Surrogate" Family to simulate the continuation of the relevant system in the adjoining Component Model(s): a. At the outside face of vertical shaft enclosures; and b. At the tenant side of the common corridor partition. B. **File naming convention:** 1. Current Conditions Model: **(Facility Abbreviation)_MODEL_SHELL_YYYY (Revit Version)** 2. Proposed Modifications Models: **(Facility Abbreviation)_(PRJ #)_MODEL_SHELL_YYYY (Revit Version)**	

Return to Table of Contents * See next page for additional BIM File Types. Abbreviations

BIM STANDARDS – FILE TYPES (CONTINUED)

FILE TYPE	DEFINITION	LINKS
Core Component Models 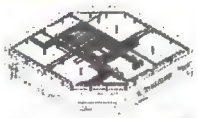	A. Contain all features of the Building Common Areas including Architectural, MEP, and Life Safety systems **(one file per floor including the roof/penthouse)**: 1. Entrance Lobby; 2. Restrooms; 3. Corridors; 4. Tenant Space Demising Partitions and Openings; 5. Equipment Rooms; 6. Floor-wide MEP equipment and distribution systems - Terminate Mechanical, Electrical, and Plumbing systems using a "System Surrogate" Family to simulate the continuation of the relevant system in the adjoining Component Model(s): a. At the outside face of vertical shaft enclosures; and b. At the tenant side of the common corridor partition. B. **File naming convention:** 1. Current Conditions Model: **(Facility Abbreviation)_MODEL_CORE_L# (Floor Level) _YYYY (Revit Version)** 2. Proposed Modifications Models: **(Facility Abbreviation)_(PRJ #)_MODEL_CORE_L# (Floor Level)**	

Return to Table of Contents * See next page for additional BIM File Types. Abbreviations

BIM STANDARDS – FILE TYPES (CONTINUED)

FILE TYPE	DEFINITION	LINKS
Suite Component Models (Tenant Spaces)	A. Contain all features of individual Tenant Suites within the boundaries of its demising partitions including Architectural, MEP, and Life Safety systems (one file per tenant space): 1. Programmed spaces (tenant lobbies, restrooms, copy/print rooms, offices, storage rooms, etc.); 2. Furniture, Fixtures and Equipment (FF&E); 3. Vertical circulation serving only an individual tenant space; 4. MEP Systems - Terminate Mechanical, Electrical, and Plumbing systems using a "System Surrogate" Family to simulate the continuation of the relevant system in the adjoining Component Model(s): a. At the outside face of vertical shaft enclosures; b. At the tenant side of the common corridor partition; and c. At the centerlines of demising partitions between Suites. B. **File naming convention:** 1. Current Conditions Model: **(Facility Abbreviation)_MODEL_SUITE_(Suite Number) _YYYY (Revit Version)** 2. Proposed Modifications Models: **(Facility Abbreviation) _(PRJ #)_MODEL_ SUITE_ (Suite Number) _YYYY (Revit Version)**	

Return to Table of Contents * See next page for additional BIM File Types. Abbreviations

BIM STANDARDS – FILE TYPES (CONTINUED)		
FILE TYPE	**DEFINITION**	**LINKS**
Project Annotation Files 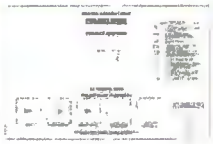	A. Contain all project-specific, non-physical information (such as notes, dimensions, etc.) describing the physical features contained in the Model Files. B. All relevant Model Files are linked in to each Project Annotation File with "Origin to Origin" positioning. C. **Explanatory Comments:** 1. Revit has several limiting factors that hinder the development of annotative information for multiple projects within a single file: a. Duplicate Sheet Numbers are not allowed; and b. Parametric titleblocks are populated by the data entered in the "Manage / Project Information" dialog box that does not accommodate input for more than one project per Revit file. 2. There are two possibilities for dealing with these limitations: a. Create a new Model File containing both model and annotation objects for each project. Duplicating a facility's Model File for each project is not desired because it would result in: (a) A large collection of uncoordinated redundant Model Files; and (b) Version control issues with no one Model File containing the latest information for the overall facility. b. Create a separate Annotation file for each project. Separating the annotative information from the Model File and creating a unique Annotation File for each project is recommended since it: (a) Works within Revit's limited capabilities to allow unique "Project Information" to be associated with each Project; and (b) Allows a single Model File to be linked into multiple Annotation Files thereby: (i) Eliminating redundant, uncoordinated Model information; and (ii) Providing access to the same, current Model information for all projects within the facility.	

Return to Table of Contents * See next page for additional BIM File Types. Abbreviations

BIM STANDARDS – FILE TYPES (CONTINUED)		
FILE TYPE	**DEFINITION**	**LINKS**
Existing Conditions Model(s)	A. In cases of facility renovation projects, a copy of any existing BIM file(s) and associated Record Documentation will be made available to PSP via TFC's cloud-based team collaboration environment. B. The existing conditions model file(s) and documentation shall be utilized in the preparation of all related design and contract documents.	
Templates	A. The following standard files will be provided to PSP by TFC: 1. Revit Model File with standardized information such as: a. Project Phasing (and associated graphic overrides); b. Graphic conventions; c. Wall (Partition) types; d. Door types; e. Door hardware functions; f. Room finish types. 2. Revit Annotation File(s) with standardized information such as: a. Drawing sheet organization; b. Graphic conventions; c. Partition keys and details; d. Legends; e. Schedules. 3. Revit Titleblocks: a. Cover Sheet; and b. Other standard sheets. B. **These template files are provided for the convenience of design professionals providing services to TFC for projects developed under TFC authority.** C. **The template files are intended to facilitate compliance with TFC design standards and must not replace the informed professional judgment of the PSP.** D. **It is solely the PSP's responsibility to determine the proper application of the standardized information contained within these files.**	• **TFC Revit 2013 Template Files** • Model File • Annotation Files (11x17) • Annotation Files (24x36) • Annotation Files (30x42) • **TFC Revit 2015 Template Files** • Model File • Annotation Files (11x17) • Annotation Files (24x36) • Annotation Files (30x42) • **TFC Revit 2017 Template Files** • Model File • Annotation Files (11x17) • Annotation Files (24x36) • Annotation Files (30x42)

Return to Table of Contents Abbreviations

BIM STANDARDS – TEAM COLLABORATION

FILE TYPE	DEFINITION	LINKS
Revit Worksets	A. TFC does not utilize Worksets. B. If utilized by PSP, remove worksets from final deliverable.	
Collaboration for Revit (Cloud-Based Collaboration)	A. TFC has adopted a team collaboration process utilizing Autodesk's *"Collaboration for Revit (C4R)"*. **While not mandatory, TFC strongly recommends and urges all PSPs to utilize this process as it is the most efficient and effective means of delivering the final BIM model(s) in the format required by TFC.** 1. All project Model Files as defined above are located within a TFC managed / Autodesk hosted *"BIM 360 Team Hub"* cloud environment. a. TFC will act as the Administrator to provide access and permissions to the various project team members. 2. Local Copies of the Central Files are downloaded and cached on individual hard drives within each PSP's office via C4R. 3. PSPs are responsible for obtaining and maintaining C4R licensing for each Revit user within their respective offices.	• Autodesk Collaboration for Revit • BIM Standards (Workflow Diagram)
Revit Software Build	A. TFC will provide information regarding the Revit Software Build (Release Version, Build number, and Update Release). B. Primary PSP must insure that all project team members are using the same Revit Software Build (Release Version, Build number, and Update Release).	

Return to Table of Contents Abbreviations

BIM STANDARDS – REVIT VIEW SETTINGS

VIEW	SCALE	DETAIL LEVEL	MODEL GRAPHICS STYLE	SHADOWS	CROP REGION	PHASE	PHASE FILTER
EXISTING							
Site Plans	1" = 20'-0"	Coarse	Hidden Line	Off	Off	Existing	Show All
Floor Plans	1/8" = 1'-0"	Medium	Hidden Line	Off	Off	Existing	Show All
Reflected Ceilings	1/8" = 1'-0"	Medium	Hidden Line	Off	Off	Existing	Show All
Exterior Elevations	1/8" = 1'-0"	Coarse	Hidden Line	Off	Off	Existing	Show All
Interior Elevations	3/8" = 1'-0"	Medium	Hidden Line	Off	Off	Existing	Show All
Building Sections	1/8" = 1'-0"	Medium	Hidden Line	Off	Off	Existing	Show All
Wall Sections	¾" = 1'-0"	Fine	Hidden Line	Off	Off	Existing	Show All
DEMOLITION							
Site Plans	1" = 20'-0"	Coarse	Hidden Line	Off	Off	Demolition	Show Previous + Demo
Floor Plans	1/8" = 1'-0"	Medium	Hidden Line	Off	Off	Demolition	Show Previous + Demo
Reflected Ceilings	1/8" = 1'-0"	Medium	Hidden Line	Off	Off	Demolition	Show Previous + Demo
Exterior Elevations	1/8" = 1'-0"	Coarse	Hidden Line	Off	Off	Demolition	Show Previous + Demo
Interior Elevations	3/8" = 1'-0"	Medium	Hidden Line	Off	Off	Demolition	Show Previous + Demo
Building Sections	1/8" = 1'-0"	Medium	Hidden Line	Off	Off	Demolition	Show Previous + Demo
Wall Sections	¾" = 1'-0"	Fine	Hidden Line	Off	Off	Demolition	Show Previous + Demo

Return to Table of Contents * See next page for additional Revit Architecture View Settings Standards. Abbreviations

BIM STANDARDS – REVIT VIEW SETTINGS (CONTINUED)

VIEW	SCALE	DETAIL LEVEL	MODEL GRAPHICS STYLE	SHADOWS	CROP REGION	PHASE	PHASE FILTER
NEW CONSTRUCTION							
Site Plans	1" = 20'-0"	Coarse	Hidden Line	Off	Off	New Construction	Show Previous + New
Floor Plans	1/8" = 1'-0"	Medium	Hidden Line	Off	Off	New Construction	Show Previous + New
Reflected Ceilings	1/8" = 1'-0"	Medium	Hidden Line	Off	Off	New Construction	Show Previous + New
Exterior Elevations	1/8" = 1'-0"	Coarse	Hidden Line	Off	Off	New Construction	Show Previous + New
Interior Elevations	3/8" = 1'-0"	Medium	Hidden Line	Off	Off	New Construction	Show Previous + New
Building Sections	1/8" = 1'-0"	Medium	Hidden Line	Off	Off	New Construction	Show Previous + New
Wall Sections	¾" = 1'-0"	Fine	Hidden Line	Off	Off	New Construction	Show Previous + New

Return to Table of Contents Abbreviations

DocuSign Envelope ID: 4D7A9C98-4F30-4D1D-907E-9A92F807637B

BIM STANDARDS – REVIT PARTITIONS

ELEMENT	DEFINITION	LINKS
Wall (Partition) Type Tags	A. When a "*Wall Type*" tag is placed, the correct partition type information is automatically populated. 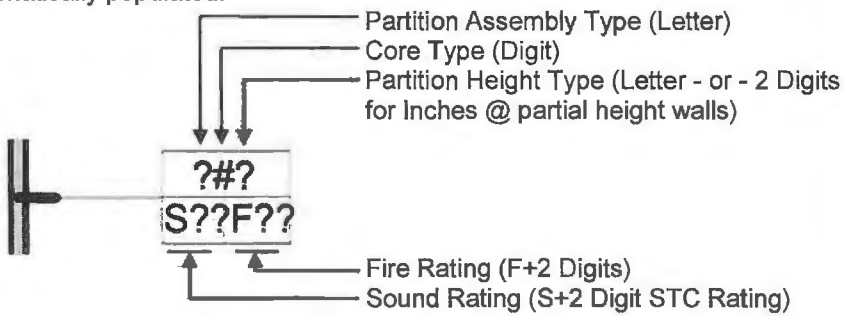 B. Partition Assembly Type Codes: A = Metal stud framing with one layer of gypsum board on each side. B = Metal stud framing with two layers of gypsum board on each side. C = Metal stud furring partition with one layer of gypsum board on the finished side. D = Metal stud Shaftwall with one inch shaft-liner and varying layers of gypsum board on the finished face. E = Metal stud framing with resilient furring channels on one side and one layer of gypsum board on each finished face. F = Metal stud framing with resilient furring channels on one side and two layers of gypsum board on each finished face. G = Metal stud framed plumbing chase with 1 layer of gypsum board on each finished face. H = Partial height metal stud framing with one layer of gypsum board on each side. J = Fire rated metal stud partition with window(s) and deluge sprinklers. K = Concrete masonry units of varying widths.	

Return to Table of Contents * See next page for additional Revit Architecture Partition Standards. Abbreviations

DocuSign Envelope ID: 4D7A9C98-4F30-4D1D-907E-9A92F807637B

BIM STANDARDS – REVIT PARTITIONS (CONTINUED)

ELEMENT	DEFINITION	LINKS
Wall (Partition) Type Tags (Continued)	A. Core Width Codes: 1 = 1 5/8" Metal Studs 3 = 3 5/8" Metal Studs 4 = 4" Metal Studs – or - 4" Nominal Masonry 6 = 6" Metal Studs – or - 6" Nominal Masonry 7 = 7" Clear inside width at metal stud framed plumbing chase 8 = 8" Metal Studs – or - 8" Nominal Masonry 9 = 9" Clear inside width at metal stud framed plumbing chase 12 = 12" Nominal Masonry B. Partition Height Codes: A = Above Ceiling (to 6" above ceiling) (Set the *"Top Offset"* constraint of the *"Wall"* to six inches more than the height of the ceiling in question) C = Ceiling (to bottom of ceiling) (Attach the *"Wall"* to the *"Ceiling"*) D = Deck High (to bottom of structural deck above) (Attach the *"Wall"* to the *"Structural Floor or Roof"* above) ## = Fixed Height (in inches to top of finish) (Set the *"Unconnected Height"* constraint of the *"Wall"* to the desired height of the partition at the top of the finished wall cap) C. Sound Rating Codes: S## (## = 2 digit STC rating number) D. Fire Rating Codes: F01 = 1 hour F02 = 2 hour F03 = 3 hour F04 = 4 hour F20 = 20 minutes F30 = 30 minutes F45 = 45 minutes F90 = 90 minutes	

Return to Table of Contents * See next page for additional Revit Architecture Partition Standards. Abbreviations

DocuSign Envelope ID: 4D7A9C98-4F30-4D1D-907E-9A92F807637B

BIM STANDARDS – REVIT PARTITIONS (CONTINUED)		
ELEMENT	**DEFINITION**	**LINKS**
Wall (Partition) Type Tags (Continued)	E. When the "*Wall Type*" is changed, the tag automatically updates with the appropriate information for the new partition type. F. Custom *"Wall Types"* can be generated if necessary, but must include the following parametric "*Identity Data*" information: 1. *Assembly Code* - Edit Uniformat selection to match the wall construction ; 2. *Type Mark* – Assign a new partition type (use TFC naming conventions); 3. *Fire Rating* – Indicate if applicable. 4. *Fire Test #* - Provide UL assembly number if partition is fire rated; 5. *Sound Test #* - Provide STC rating if applicable; and 6. *UL URL* – Provide web address for specific UL assembly.	
Wall (Partition) Types)	A. The Project Template file has a large library of TFC standard "*Wall Types*" (interior partitions) pre-loaded. B. All TFC standard "*Wall Types*" contain parameter text that matches the appropriate TFC standard partition type. C. "*Wall Type*" names are based on the Type Tag conventions above: 1. Example: "**A3DS-51**" a. Partition Type: **A** b. Core Width: **3** 5/8" metal stud framing c. Partition Height: **D**eck high d. Sound Rating: **S**TC **51** e. Fire Rating: None	

Return to Table of Contents Abbreviations

DocuSign Envelope ID: 4D7A9C98-4F30-4D1D-907E-9A92F807637B

BIM STANDARDS – REVIT DOOR TYPES (KEY SCHEDULE)

The Project Template file has a library of TFC standard "*Door Types*" based on the function of the space the door is serving. Schedule information parameters are pre-defined as follows:

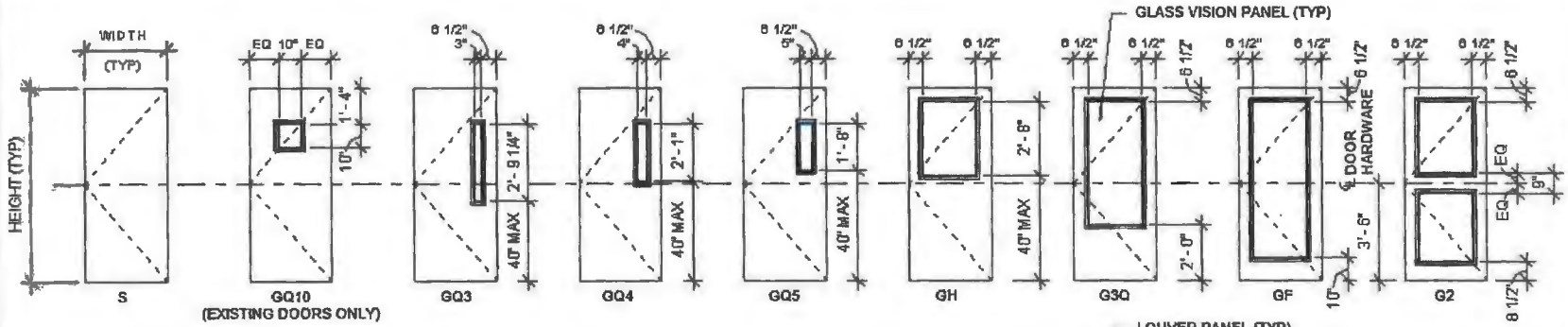

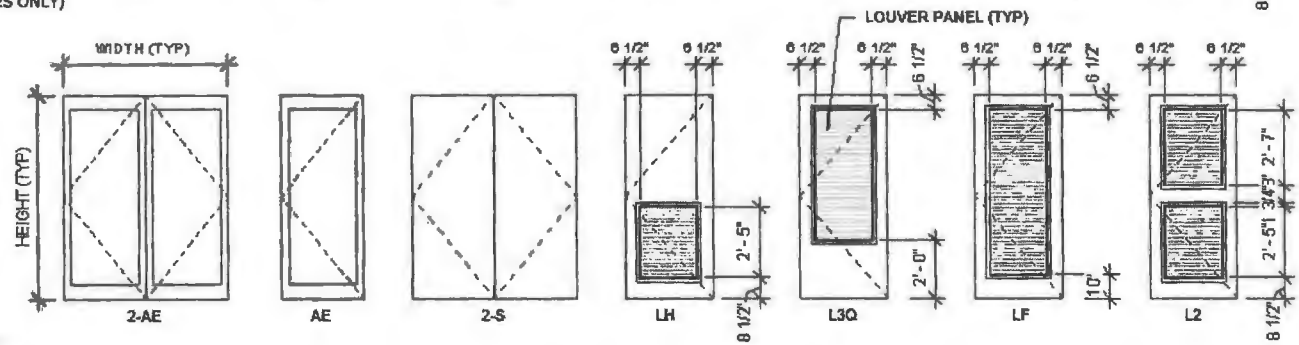

DOOR TYPE NOTES

1. "2-" IN FRONT OF THE DOOR PANEL TYPE DENOTES A PAIR
2. "AE" MEANS ALUMINUM ENTRANCE
3. VISION PANEL CONFIGURATIONS FOR PAIRS ARE SIMILAR TO SINGLE DOOR CONFIGURATIONS
4. PROVIDE 1/4" CLEAR TEMPERED GLASS IN ALL NON-FIRE RATED DOORS WITH VISION PANELS
5. PROVIDE 1/4" CLEAR FIRE RATED GLASS IN ALL FIRE RATED DOORS WITH VISION PANELS
6. NOT ALL DOOR TYPES ARE UTILIZED IN THIS PROJECT - SEE DOOR SCHEDULE FOR RELEVANT DOOR TYPES

Hardware Abbreviations	CL – Closer EA – Electronic Access ED – Exit Device FBA – Flush Bolt (Automatic) PA – Power Assist KP – Kick Plate	LA – Latchset LO – Lockset (Office) LP – Lockset (Privacy) LS – Lockset (Storage) PP – Push Plate PU - Pull	RH – Robe Hook RM – Removable Mullion STW – Stop (Wall) SS – Smoke Seal TH - Threshold WS - Weatherstripping

Return to Table of Contents * See next page for additional Revit Architecture Door Types. Abbreviations

BIM STANDARDS – REVIT DOOR TYPES (KEY SCHEDULE) (CONTINUED)

DOOR TYPE	WIDTH (inches)	HEIGHT (inches)	DOOR TYPE	DOOR MATERIAL	DOOR FINISH	FRAME TYPE	FRAME MATERIAL	FRAME FINISH	HARDWARE FUNCTIONS
Conference	36	84	GQ3	Solid Core Wood	Trans-parent	Single	Aluminum	Anodized	LO, CL, STW
Conference (Enhanced)	36	84	GQ3	Solid Core Wood	Trans-parent	Single Sidelite	Aluminum	Anodized	LO, CL, STW
Copy/Print	36	84	GQ5	Solid Core Wood	Trans-parent	Single	Aluminum	Anodized	LA, STW
Corridor (Exit)	36	84	S	Solid Core Wood	Trans-parent	Single	Aluminum	Anodized	LO, CL, STW
Restroom (Single)	36	84	S	Solid Core Wood	Trans-parent	Single	Aluminum	Anodized	LP, CL, STW
Restroom (Common)	36	84	S	Solid Core Wood	Trans-parent	Single	Aluminum	Anodized	PU, PP, KP, CL, STW
Server	36	84	S	Solid Core Wood	Trans-parent	Single	Aluminum	Anodized	EA, LS, STW
Stair	36	84	S	Hollow Metal	Paint	Single	Hollow Metal	Paint	ED, CL, SS
Storage (Single)	36	84	S	Solid Core Wood	Trans-parent	Single	Aluminum	Anodized	LS, STW
Storage (Double)	72	84	2-S	Solid Core Wood	Trans-parent	Single	Aluminum	Anodized	LS, RM
Entrance (Primary, Exterior)	72	84	2GF	Aluminum / Glass	Anodized	Double	Aluminum	Anodized	EA, ED, FBA, CL, PA, TH, WS
Entrance (Secondary, Exterior)	36	84	S	Hollow Metal	Paint	Single	Hollow Metal	Paint	EA, ED, CL, PA, TH, WS
File	36	84	GQ5	Solid Core Wood	Trans-parent	Single	Aluminum	Anodized	LS, CL, STW
Maintenance	36	84	S	Solid Core Wood	Trans-parent	Single	Hollow Metal	Paint	LS, CL, STW
MEP (Single)	36	84	S	Solid Core Wood	Trans-parent	Single	Hollow Metal	Paint	LS, CL, STW
MEP (Double)	72	84	2-S	Solid Core Wood	Trans-parent	Single	Hollow Metal	Paint	LS, CL

Return to Table of Contents

* See next page for additional Revit Architecture Door Types.

Abbreviations

BIM STANDARDS – REVIT DOOR TYPES (KEY SCHEDULE) (CONTINUED)

DOOR TYPE	WIDTH (inches)	HEIGHT (inches)	DOOR TYPE	DOOR MATERIAL	DOOR FINISH	FRAME TYPE	FRAME MATERIAL	FRAME FINISH	HARDWARE FUNCTIONS
Office	36	84	S	Solid Core Wood	Trans-parent	Single	Aluminum	Anodized	LO, RH, STW
Office Suite	36	84	S	Solid Core Wood	Trans-parent	Single Sidelite	Aluminum	Anodized	LO, STW
Restroom (Single)	36	84	S	Solid Core Wood	Trans-parent	Single	Aluminum	Anodized	LP, CL, STW
Restroom (Common)	36	84	S	Solid Core Wood	Trans-parent	Single	Aluminum	Anodized	PP, PU, KP, CL, STW
Server	36	84	S	Solid Core Wood	Trans-parent	Single	Aluminum	Anodized	EA, LS, STW
Stair	36	84	S	Hollow Metal	Paint	Single	Hollow Metal	Paint	ED, CL, SS
Storage (Single)	36	84	S	Solid Core Wood	Trans-parent	Single	Aluminum	Anodized	LS, STW
Storage (Double)	72	84	2-S	Solid Core Wood	Trans-parent	Single	Aluminum	Anodized	LS, RM

Return to Table of Contents Abbreviations

DocuSign Envelope ID: 4D7A9C98-4F30-4D1D-907E-9A92F807637B

BIM STANDARDS – REVIT ROOM STYLES (KEY SCHEDULE)

The Project Template file has a library of TFC standard "*Room Styles*" with Finish Schedule information parameters pre-defined.

ROOM TYPE	FLOOR	BASE	CEILING
Break	LVT	4" Rubber Cove	2'x2' ACT
Conference	Carpet Tile	4" Rubber Cove	2'x2' ACT
Conference (Enhanced)	Carpet Tile	Wood (Stained)	2'x2' ACT, Painted Gypsum Board
Copy / Print	LVT	4" Rubber Cove	2'x2' ACT
Corridor	Carpet Tile	4" Rubber Cove	2'x2' ACT
File	Carpet Tile	4" Rubber Cove	2'x2' ACT
Maintenance	Sealed Concrete	4" Rubber Cove	2'x2' ACT
MEP	Sealed Concrete	None	2'x2' ACT
Office	Carpet Tile	4" Rubber Cove	2'x2' ACT
Restroom	Tile	Tile	Painted Gypsum Board
Server	Static Dissipative Tile	4" Rubber Cove	2'x2' ACT
Shower	Tile	Tile	Water Resistant Gypsum Board (Epoxy Paint)
Stair	Sealed Concrete	None	2'x2' ACT, Painted Structure
Storage (General)	Sealed Concrete	None	Painted Structure
Storage (Office)	Carpet Tile	4" Rubber Cove	2'x2' ACT

Return to Table of Contents Abbreviations

DocuSign Envelope ID: 4D7A9C98-4F30-4D1D-907E-9A92F807637B

BIM STANDARDS – REVIT MATERIALS

The Project Template file has a library of TFC standard "*Materials*" with Design Selections Schedule information parameters pre-defined.

MARK	MATERIAL CLASS	DESCRIPTION
AT-AC01	Acoustical Treatment (AT)	Acoustical Coating (AC)
AT-SAP01	Acoustical Treatment (AT)	Sound Absorptive Panel (SAP)
AT-SRP01	Acoustical Treatment (AT)	Sound Reflective Panel (SRP)
AW-WD01	Architectural Woodwork (AW)	Wood Trim (WD)
AW-WP01	Architectural Woodwork (AW)	Wood Panel (WP)
AW-WV01	Architectural Woodwork (AW)	Wood Veneer (WV)
CF-BR01	Concrete Finish (CF)	Broom Finished Concrete (BR)
CF-CS01	Concrete Finish (CF)	Clear Sealer (CS)
CF-EA01	Concrete Finish (CF)	Exposed Aggregate (EA)
CF-IC01	Concrete Finish (CF)	Integral Color (IC)
CF-POL01	Concrete Finish (CF)	Polished (POL)
CF-RF01	Concrete Finish (CF)	Rough Formwork (RF)
CF-SB01	Concrete Finish (CF)	Sandblasted (SB)
CF-ST01	Concrete Finish (CF)	Stained (ST)
CF-TRW01	Concrete Finish (CF)	Trowel Finished (TR)

Return to Table of Contents * See next page for additional Revit Materials. Abbreviations

BIM STANDARDS – REVIT MATERIALS (CONTINUED)

MARK	MATERIAL CLASS	DESCRIPTION
CL-AT01	Ceilings (CL)	Acoustical Ceiling Tile (AT)
CL-GD01	Ceilings (CL)	Acoustical Ceiling Grid (GD)
CL-LS01	Ceilings (CL)	Linear Ceiling System (LS) - Wood or Metal
CW-HG01	Casework (CW)	Hardware Grommet (HG)
CW-HP01	Casework (CW)	Hardware Pull (HP)
DS-CB01	Visual Display Surfaces (DS)	Chalk Board (CB)
DS-MB01	Visual Display Surfaces (DS)	Marker Board (MB)
DS-TB01	Visual Display Surfaces (DS)	Tack Board (TB)
FL-AF01	Flooring (FL)	Access Flooring (AF)
FL-CK01	Flooring (FL)	Cork (CK)
FL-CP01	Flooring (FL)	Carpet (CP) - Broadloom or Tile
FL-FA01	Flooring (FL)	Fluid Applied (FA)
FL-LS01	Flooring (FL)	Linoleum Sheet (LS)
FL-LT01	Flooring (FL)	Linoleum Tile (LT)
FL-SDT01	Flooring (FL)	Static Dissipative Tile (SDT)
FL-TZ01	Flooring (FL)	Terrazzo (TZ)
FL-VS01	Flooring (FL)	Vinyl Sheet (VS)

Return to Table of Contents * See next page for additional Revit Materials. Abbreviations

BIM STANDARDS – REVIT MATERIALS (CONTINUED)

MARK	MATERIAL CLASS	DESCRIPTION
FL-VT01	Flooring (FL)	Vinyl Tile (VT) - VCT, Solid Vinyl..
FL-WD01	Flooring (FL)	Wood (WD)
GF-CK01	General Finishes (GF)	Cork (CK)
GF-CT01	General Finishes (GF)	Ceramic Tile (CT)
GF-CTG01	General Finishes (GF)	Ceramic Tile Grout (CTG)
GF-FB01	General Finishes (GF)	Fabric (FB)
GF-M01	General Finishes (GF)	Metal (M)
GF-PL01	General Finishes (GF)	Plastic Laminate (PL)
GF-QS01	General Finishes (GF)	Quartz Surface (QS)
GF-SS01	General Finishes (GF)	Solid Surface (SS)
GF-ST01	General Finishes (GF)	Stone Tile (ST)
GL-G01	Glazing (GL)	Glass (G) - Tempered, Decorative, Mirrored, LCD..
GL-PG01	Glazing (GL)	Plastic Glazing (PG)
GL-SF01	Glazing (GL)	Surface Applied Film (SF)

Return to Table of Contents * See next page for additional Revit Materials. Abbreviations

DocuSign Envelope ID: 4D7A9C98-4F30-4D1D-907E-9A92F807637B

BIM STANDARDS – REVIT MATERIALS (CONTINUED)

MARK	MATERIAL CLASS	DESCRIPTION
PC-CS01	Paints and Coatings (PC)	Clear Sealer (CS)
PC-HP01	Paints and Coatings (PC)	High Performance / Special Coatings (HP) - Fire Resistive, Galvanizing...
PC-IP01	Paints and Coatings (PC)	Interior Paint (IP)
PC-IS01	Paints and Coatings (PC)	Interior Stain (IS)
PC-IT01	Paints and Coatings (PC)	Interior Textured Coating (IT)
PC-WR01	Paints and Coatings (PC)	Water Repellant Coating (WR)
PC-XP01	Paints and Coatings (PC)	Exterior Paint (XP)
PC-XS01	Paints and Coatings (PC)	Exterior Stain (XS)
PC-XT01	Paints and Coatings (PC)	Exterior Textured Coating (XT)
WB-R401	Wall Base (WB)	Rubber 4" (R4)
WB-R601	Wall Base (WB)	Rubber 6" (R6)
WB-V401	Wall Base (WB)	Vinyl 4" (V4)
WB-V601	Wall Base (WB)	Vinyl 6" (V6)
WB-WD401	Wall Base (WB)	Wood 4" (WD4)
WB-WD601	Wall Base (WB)	Wood 6" (WD6)
WF-FP01	Interior Wall Finishes (WF)	Fabric Panel (FP)
WF-WC01	Interior Wall Finishes (WF)	Wall Covering (WC) – Fabric, Vinyl...

Return to Table of Contents * See next page for additional Revit Materials. Abbreviations

BIM STANDARDS – REVIT MATERIALS (CONTINUED)

MARK	MATERIAL CLASS	DESCRIPTION
WP-CG01	Wall Protection (WP)	Corner Guard (CG)
WP-WG01	Wall Protection (WP)	Wall Guard (WG)
WT-BL01	Window Treatments (WT)	Blinds (BL)
WT-DR01	Window Treatments (WT)	Drapery / Curtain (DR)
WT-SH01	Window Treatments (WT)	Window Shades (SH)
XF-BK01	Exterior Finishes (XF)	Brick (BK)
XF-CFS01	Exterior Finishes (XF)	Cement Fiberboard Siding (CFS)
XF-CM01	Exterior Finishes (XF)	Concrete Masonry Unit (CM)
XF-CP01	Exterior Finishes (XF)	Cement Plaster (CP)
XF-GU01	Exterior Finishes (XF)	Glass Unit Masonry (GU)
XF-LS01	Exterior Finishes (XF)	Linear Soffit System (LS) - Wood or Metal
XF-MP01	Exterior Finishes (XF)	Metal Panel (MP)
XF-PC01	Exterior Finishes (XF)	Precast Concrete (PC)
XF-SP01	Exterior Finishes (XF)	Simulated Plaster (SP) – EIFS...
XF-SS01	Exterior Finishes (XF)	Simulated Stone (SS)
XF-ST01	Exterior Finishes (XF)	Stone (ST)
XF-WS01	Exterior Finishes (XF)	Wood Siding (WS)

Return to Table of Contents Abbreviations

DocuSign Envelope ID: 4D7A9C98-4F30-4D1D-907E-9A92F807637B

BIM STANDARDS –RECOMMENDED PRACTICES		
TOPIC	**RECOMMENDATION**	**LINKS**
Model Planning & Coordination	A. Utilize a BIM Planning and Coordination Document such as in Appendix M (or a similar document) to identify authorship responsibility for each portion of the Building Model Central File. B. Do not modify or manipulate elements that other PSPs are responsible for.	• Appendix M - BIM Planning Document
Revit File Maintenance	A. Audit the Central Files periodically to identify and correct file irregularities. B. Compact the Central files at the end of each work day to reduce file size.	
Digital Data Agreement	A. It is TFC's intent to share the Project BIM Model with the Contractor for their use in project scheduling and coordination. B. TFC recommends that the PSP include a Division 1 Specification requirement for the Contractor, Subcontractors, and Suppliers to enter into a Digital Data Licensing Agreement such as AIA Document C106-2007.	• AIA Documents
Digital Coordination & Review	A. TFC utilizes Autodesk's free "Design Review" software to review all documentation submitted by PSPs.	• Autodesk Design Review Software
Revit Productivity	A. Download and utilize software extensions and bonus tools available from the Autodesk Subscription Center	

Return to Table of Contents Abbreviations

DocuSign Envelope ID: 4D7A9C98-4F30-4D1D-907E-9A92F807637B

APPENDICES		
NUMBER	**TITLE**	**DESCRIPTION**
A	**Reserved for Future Use**	A. (Previously "Standard Procedure for Measurement")
B	**Reserved for Future Use**	A. (Previously "Sustainable Building Practices")
C	**Indoor Air Quality Guidelines**	A. Design and construction requirements for meeting indoor air quality criteria.
D	**Reserved for Future Use**	A. (Previously "Energy Simulation Software").
E	**Reserved for Future Use**	A. (Previously "Resources")
F	**Landscaping Criteria**	A. Standards for the selection and specification of water conserving landscape materials.
G	**Facilities Programming Guide**	A. Recommended practices for the programming of facilities to be developed under the authority of TFC.
H	**DPS Standards (08/08/2006)**	A. Design standards for DPS projects.
I	**Reserved for Future Use**	A. (Previously "Common TAS Errors")
J	**DPS Design Issues**	A. A sampling of common design issues and preferred solutions on DPS projects.
K	**Project Manual Format and Specification Requirements**	A. *Standard formatting for:* 1. Project Manual Cover and signature pages; and 2. Specification sections. B. Standards for the content of select specification sections.
L	**Space Allocation Program**	A. Standard spreadsheet for recording square footages for proposed buildings, departments, and individual spaces.
M	**Building Information Model Planning and Coordination Document**	A. Matrix for assigning BIM scopes of work by discipline.

Return to Table of Contents

Abbreviations

DocuSign Envelope ID: 4D7A9C98-4F30-4D1D-907E-9A92F807637B

WEB LINKS INCLUDED IN THIS DOCUMENT

STATE OF TEXAS

DIR	**Department of Information Resources**	http://www.dir.state.tx.us/
DPS	**Department of Public Safety**	http://www.txdps.state.tx.us/index.htm
HSC	**Health & Safety Code (Texas)**	http://www.statutes.legis.state.tx.us/?link=GV
SECO	**State Energy Conservation Office**	http://www.seco.cpa.state.tx.us/index.php
	Texas Design Standard Compliance Forms	http://www.seco.cpa.state.tx.us/resources/
	AHRAE 90.1 and ComCheck Adoption	https://www.energycodes.gov/adoption/states/texas
	SECO Suggested Water Efficiency Standards	http://www.seco.cpa.state.tx.us/tbec/waterconservation.php
SFMO	**State Fire Marshal's Office**	http://www.tdi.state.tx.us/fire/index.html
TCEQ	**Texas Commission on Environmental Quality**	https://www.tceq.texas.gov/
	TCEQ Construction Activities Regulations	http://www.tceq.state.tx.us/permitting/water_quality/stormwater/TXR15_AIR.html
TDI	**Texas Department of Insurance**	http://www.tdi.state.tx.us/
TDLR	**Texas Department of Licensing and Regulation – Home Page**	http://www.license.state.tx.us/index.htm
	Document Submission Requirements	http://www.license.state.tx.us/ab/abrules.htm#6850
	EAB (Elimination of Architectural Barriers)	http://www.license.state.tx.us/ab/ab.htm
	Fee Schedule	http://www.license.state.tx.us/ab/abfees.htm
	Online Registration	https://www.license.state.tx.us/ABProjectRegistrationOnline/
	TAS (Texas Accessibility Standards)	http://www.license.state.tx.us/ab/abtas.htm#toc
	Architectural Barriers Technical Memoranda	http://www.license.state.tx.us/ab/techmemos.htm
TAC	**Texas Administrative Code**	http://texreg.sos.state.tx.us/public/readtac$ext.viewtac

Return to Table of Contents * See next page for additional Web Links. Abbreviations

DocuSign Envelope ID: 4D7A9C98-4F30-4D1D-907E-9A92F807637B

WEB LINKS INCLUDED IN THIS DOCUMENT (CONTINUED)

STATE OF TEXAS (Continued)

TFC	**Texas Facilities Commission – Home Page**	http://www.tfc.state.tx.us/
	ACAD Template Files	http://a360.co/1fqN6R8
	TFC BIM 360 Team	https://mytfc.autodesk360.com/g/all_projects/active
	FDC (Facilities Design and Construction)	http://www.tfc.state.tx.us/divisions/facilities/prog/construct/
	EM (Energy Management)	http://www.tfc.state.tx.us/divisions/facilities/prog/FMD/EnergyManagement.html
	EPMCS (Electronic Project Management Control System)	https://impact.parsons.com/projects/TBPC/3didefault.asp
	Guidelines / Standards	http://www.tfc.state.tx.us/divisions/facilities/prog/construct/formsindex
	IMPACT (Web based Project Management Software)	https://impact.parsons.com/projects/TBPC/3didefault.asp
	Facilities Operations and Maintenance	http://www.tfc.state.tx.us/divisions/facilities/prog/pm/Maintenance.html
	Forms Index	http://www.tfc.state.tx.us/divisions/facilities/prog/construct/formsindex/
	Historically Underutilized Businesses (HUB)	http://www.tfc.state.tx.us/divisions/commissionadmin/prog/HUB/
	Procurement	http://www.tfc.state.tx.us/divisions/commissionadmin/prog/internal-procurement-1/
	Planning and Real Estate Management	http://www.tfc.state.tx.us/divisions/facilities/prog/planning
	UGC / SGC (Uniform and Supplementary General Conditions)	http://www.tfc.state.tx.us/divisions/facilities/prog/construct/formsindex
TGC	**Texas Statutes - Government Code**	http://www.statutes.legis.state.tx.us/?link=GV
THC	**Texas Historical Commission**	http://www.thc.state.tx.us/index.shtml

FEDERAL and LOCAL

ADA	Americans With Disabilities Act	http://www.ada.gov/
	2010 ADA Standards for Accessible Design	http://www.ada.gov/stdspdf.htm
	2010 Standards for State and Local Governments Title II	https://www.ada.gov/regs2010/2010ADAStandards/2010ADAstandards.htm#titleII
COA	City of Austin	http://www.austintexas.gov/

CAPITOL VIEW CORRIDOR

TGC 3151	Preservation of View of State Capitol	http://www.statutes.legis.state.tx.us/Docs/GV/pdf/GV.3151.pdf
LDC	Land Development Code (City of Austin)	https://www.municode.com/library/tx/austin/codes/code_of_ordinances?nodeId=TIT25LADE

Return to Table of Contents * See next page for additional Web Links. Abbreviations

DocuSign Envelope ID: 4D7A9C98-4F30-4D1D-907E-9A92F807637B

WEB LINKS INCLUDED IN THIS DOCUMENT (CONTINUED)

CODES AND REFERENCE STANDARDS

AIA D101-1995	Methods of Calculating the Area and Volume of Buildings;	https://www.aiabookstore.com/aia-documents/aia-documents-d-series.html
ANSI	American National Standards Institute	http://www.ansi.org/
ASHRAE	The American Society of Heating, Refrigerating and Air-Conditioning Engineers	http://www.ashrae.org/
	90.1 - Energy Conservation Design Standard for State-Funded Buildings	http://www.techstreet.com/lists/ashrae_standards.tmpl
	Standard 180	http://www.techstreet.com/searches/16010335
Comcheck	Energy Code Compliance Checking Software	http://energycode.pnl.gov/COMcheckWeb/
CSI MasterFormat	2004/2016 Edition Numbers and Titles	http://www.csiresources.org/practice/standards
ICC	International Code Council	https://www.iccsafe.org/
	International Code Council ICC Store	http://shop.iccsafe.org/
	Public Access E-Codes	https://codes.iccsafe.org/public/collections/I-Codes
	IECC	https://www.iccsafe.org/codes-tech-support/codes/2015-i-codes/iecc/
NFPA	**National Fire Protection Association – Home Page**	http://www.nfpa.org/
	NFPA 101 - Life Safety Code	http://www.nfpa.org/aboutthecodes/AboutTheCodes.asp?DocNum=101
	NFPA 70 - National Electrical Code	http://www.nfpa.org/aboutthecodes/AboutTheCodes.asp?DocNum=70
	NFPA 70E - Standard for Electrical Safety in the Workplace	http://www.nfpa.org/codes-and-standards/all-codes-and-standards/list-of-codes-and-standards?mode=code&code=70E

SOFTWARE

Autodesk *"Autocad"*	http://usa.autodesk.com/adsk/servlet/pc/index?id=13779270&siteID=123112
Autodesk *"Autocad Civil 3D"*	http://usa.autodesk.com/civil-3d/
Autodesk *"Collaboration for Revit (C4R)"*	http://www.autodesk.com/products/collaboration-for-revit/overview
Autodesk *"Design Review"*	http://www.autodesk.com/products/design-review/overview
Autodesk *"DWF Writer"*	http://usa.autodesk.com/dwf-writer/
Autodesk *"Navisworks"*	http://www.autodesk.com/products/navisworks/overview
Autodesk *"Revit"*	http://www.autodesk.com/products/revit-family/overview

Return to Table of Contents Abbreviations

DocuSign Envelope ID: 4D7A9C98-4F30-4D1D-907E-9A92F807637B

INDEX

Abbreviations 3, 4
Accessibility (Registration and Review - BA) 64
Accessibility (Review and Inspection) 23
ADA Standards 15
Adjacency and Stacking Diagrams (SD) 35
Alternative Energy Evaluations (TFC Resonsibility) 13
Appendices 108
ASHRAE 90.1 ..... 11, 15, 42, 45, 46, 53, 54, 61
ASHRAE 90.1 (SECO Adoption) 15
Bid Documents (BA) 62
BIM / CADD Standards (Overview) 71
BIM Model (Submission Procedures) 19
BIM Model Planning & Coordination Document 108
BIM Model Planning and Coordination (Recommended Practices) 107
BIM Models (Content - BA) 62
BIM Models (Content - CA) 65
BIM Models (Content - CD) 56
BIM Models (Content - DD) 47
BIM Models (Content) (SD) 39
BIM Models (Record Documents) 66
BIM Standards - Model Types (Archive Copy Models) 82
BIM Standards - Model Types (Building Component Models) 84
BIM Standards - Model Types (Building Component Models) 80
BIM Standards - Model Types (Building Master Models) 80, 84
BIM Standards - Model Types (Building Shell Models) 85
BIM Standards - Model Types (Campus Master Models) 82
BIM Standards - Model Types (Campus Master Models) 80
BIM Standards - Model Types (Component Models) 80
BIM Standards - Model Types (Core Models) 86
BIM Standards - Model Types (Current Conditions Models) 80
BIM Standards - Model Types (Project Copy Models) 80
BIM Standards - Model Types (Site Component Models) 82
BIM Standards - Model Types (Site Component Models) 80
BIM Standards - Model Types (Site Master Models) 80
BIM Standards - Model Types (Structural Models) 84
BIM Standards - Model Types (Suite Models) 87
BIM Standards (Annotation Files) 77
BIM Standards (Collaboration for Revit) 91
BIM Standards (Deviation From) 71
BIM Standards (Existing Conditions Models) 89
BIM Standards (File Types - General) 77
BIM Standards (File Types) 77, 80, 82, 84, 85, 86, 87, 88, 89, 91
BIM Standards (Model Files) 77
BIM Standards (Model Types) 80, 82
BIM Standards (Project Annotation Files – Explanatory Comments) 88
BIM Standards (Project Annotation Files) 88
BIM Standards (Purpose) 71, 77
BIM Standards (Recommended Practices) 107
BIM Standards (Revit Door Types) 97, 98, 99
BIM Standards (Revit Materials) 101, 102, 104, 105, 106
BIM Standards (Revit Partitions) 94, 95, 96
BIM Standards (Revit Room Styles) 100
BIM Standards (Revit Software Build) 91
BIM Standards (Revit View Settings) 92, 93
BIM Standards (Revit Wall Type Tags) 94, 95, 96
BIM Standards (Revit Wall Types Library) 96
BIM Standards (Revit Worksets) 91
BIM Standards (Software Requirements) 71
BIM Standards (Template Files) 89
BIM Standards (TFC Adoption) 71
BIM Standards (Workflow Diagram) 78
BIM Team Collaboration 71
Building Area (Reporting Requirements) 37
CADD Standards 72, 73, 75, 76
CADD Standards (Accuracy) 72
CADD Standards (Area Calculations) 76
CADD Standards (Blocks) 73
CADD Standards (Colors) 73
CADD Standards (Dimensions) 75
CADD Standards (Drawing Origin) 75
CADD Standards (Existing Conditions Files) 72
CADD Standards (Hatching) 75
CADD Standards (Layers) 75
CADD Standards (Limitations of Use) 5, 71

DocuSign Envelope ID: 4D7A9C98-4F30-4D1D-907E-9A92F807637B

CADD Standards (Linetypes) ... 73
CADD Standards (Purge/Audit) ... 76
CADD Standards (Purpose) ... 72
CADD Standards (Quality Check) ... 76
CADD Standards (Reference Files) ... 73
CADD Standards (Scale) ... 73
CADD Standards (Template Files) ... 72
CADD Standards (Text and Fonts) ... 75
CADD Standards (Units) ... 73
Capitol Views ... 11
Change Documentation (CA) ... 65
Change Orders ... 9
City of Austin Land Development Code ... 11
Civil 3D Files (Submission Procedures) ... 19
Clash Detection ... 47
Codes and Standards ... 15
Contract Documents (Consolidated Set - CA) ... 65
CSI MasterFormat (2004 Edition) ... 59
Data / Calculations (BA) ... 64
Data / Calculations (CD) ... 61
Data / Calculations (DD) ... 54
Digital Coordination & Review (Recommended Practices) ... 107
Digital Data Agreement (Recommended Practices) ... 107
Document Review (TFC Responsibility) ... 9
Document Submission Procedures ... 19, 21, 23, 25
Door Types ... 69
DPS Design Issues ... 108
DPS Standards ... 108
Drawing Standards (Document Organization) ... 67, 69
Drawing Standards (Drawing Numbering) ... 67
Drawings (Content - CD) ... 58, 59
Drawings (Content - SD1) ... 39, 41, 42
Drawings (Content – SD2) ... 42
Drawings (Content –DD) ... 49, 50, 52, 53
Drawings (Electronic Document Submission Procedures) ... 19
Electronic Documents (Submission Procedures) ... 19, 21
Electronic File Submission Format . 29, 30, 32, 34, 35, 37, 39, 41, 42, 44, 45, 46, 47, 49, 50, 52, 53, 54, 56, 58, 59, 61, 62, 64, 65, 66
Elimination of Architectural Barriers (Technical Memoranda) ... 16
Energy / Water Conservation (TFC Responsibility) ... 11
Energy / Water Conservation Rebates ... 23
Energy Efficient Architectural & Engineering Design Alternatives (SD) ... 42
Estimate of Probable Project Construction Cost (CD) ... 56
Estimate of Probable Project Construction Cost (DD) ... 47
Estimate of Probable Project Construction Cost (SD) ... 32
Executive Summary Report (Assessment / PD) ... 29
Executive Summary Report (BA) ... 62
Executive Summary Report (CD) ... 56
Executive Summary Report (DD) ... 47
Executive Summary Report (SD) ... 32
Existing Conditions Analysis (Assessment / PD) ... 30
Facilities Programming Guide ... 108
FDC Forms Index ... 5
Guidelines/Standards (Applicability) ... 5
Guidelines/Standards (Intent) ... 5
Guidelines/Standards (Periodic Revisions) ... 5
Hazardous Materials ... 17
Hazardous Materials (Certification letter) (BA) ... 64
Historical Status (Determination and Compliance) ... 24
HSC 425 (Regulation of Certain Outdoor Lighting) ... 15
Indoor Air Quality Guidelines ... 108
International Code Council ... 15
Keyed Notes ... 67
Landscaping Criteria ... 108
Layout Diagrams (SD) ... 35
Lighting Pollution (Exterior) ... 15
Materials Designations ... 69
Model Types
  Building Shell Models ... 84
  Core Models ... 84
  Suite Models ... 84
Narratives / Analyses / Evaluations (BA) ... 62
Narratives / Analyses / Evaluations (CD) ... 61
Narratives / Analyses / Evaluations (DD) ... 54
Narratives / Analyses / Evaluations (SD) ... 44, 45, 46
NFPA 101 ... 15
NFPA 101 (SFMO Adoption) ... 15
NFPA 70 (NEC) ... 15
NFPA 70E ... 15

DocuSign Envelope ID: 4D7A9C98-4F30-4D1D-907E-9A92F807637B

Partition Types ... 69
Partition Types (Assembly Type Codes) ... 94
Partition Types (Core Width Codes) ... 95
Partition Types (Custom) ... 96
Partition Types (Fire Rating Codes) ... 95
Partition Types (Height Codes) ... 95
Partition Types (Sound Rating Codes) ... 95
Printed Documents (Submission Procedures) ... 21
Project Funding ... 9
Project Implementation Plan (Assessment / PD) ... 29
Project Objective Statement (Assessment / PD) ... 29
Record Documents (Content) ... 66
Response to Owner Comments (Submission Procedures) ... 23
Revit File Maintenance (Recommended Practices) ... 107
Revit Files (Submission Procedures) ... 19, 21
Room Data Sheets (SD) ... 34
Room Styles ... 69
Round Trip Review Process ... 19
Roundtrip Review Process Diagram ... 25
Schedule for Delivery of Services (Assessment / PD) ... 30
Schedule for Delivery of Services (BA) ... 62
Schedule for Delivery of Services (CA) ... 65
Schedule for Delivery of Services (CD) ... 56
Schedule for Delivery of Services (DD) ... 47
Schedule for Delivery of Services (SD)t ... 32
SECO (Compliance Forms) ... 23
SECO (State Energy Conservation Office) ... 11, 13
SECO (Texas Design Standard Compliance Forms) ... 23, 64
SECO (Water Conservation Standard) ... 45
SECO Documentation (BA) ... 64
SECO Suggested Water Efficiency Standards ... 11
Site Inspections ... 17
Software Requirements ... 5
Space Allocation Program ... 47
Space Allocation Program ... 108
Space Allocation Program (BA) ... 62
Space Allocation Program (CD) ... 56
Space Allocation Program (SD) ... 37
Specifications (Content - CD) ... 59
Specifications (Content - DD) ... 54
Specifications (Content - SD) ... 42
State Agencies ... 7
State Agencies (Other Key Agencies) ... 7
State Agencies (TFC) ... 7
State Agencies (Using Agency) ... 7
Statutory Charge (of TFC) ... 5
Statutory Requirements ... 9, 11, 13, 14, 15, 17
Submission Content (Assessment / Predesign) ... 29, 30
Submission Content (Construction) ... 65, 66
Submission Content (Contract Bidding and Award) ... 62, 64
Submission Content (Contract Documents) ... 56, 58, 59, 61
Submission Content (Design Development) ... 47, 49, 50, 52, 53, 54
Submission Content (Schematic Design) ... 32, 34, 35, 37, 39, 41, 42, 44, 45, 46
Submission Format Requirements ... 26, 27
Submission Milestones ... 26, 27
Submission Milestones (Assessment / PD) ... 26
Submission Milestones (Construction) ... 27
Submission Milestones (Contract Bidding and Award) ... 27
Submission Milestones (Contract Documents) ... 27
Submission Milestones (Design Development) ... 26
Submission Milestones (Schematic Design) ... 26
Submission Milestones (Warranty) ... 27
Submission Procedures ... 19, 21, 23, 25
Supplemental General Conditions ... 17
SWPPP (Storm Water Polution Prevention Plan) ... 11
Table of Contents ... 2
TAC (Texas Administrative Code) ... 11
TAC, 25,1, 295, C, 295.34 ... 17
TAS Standards ... 16
TCEQ (Texas Commission for Environmental Quality) ... 25
TCEQ / EPA Documentation (BA) ... 64
TCEQ Construction Activities Legislation ... 11
TDLR (Document Submission Requirements) ... 23
TDLR (Fee Schedule) ... 23
TDLR (Online Registration) ... 23
Technical Requirements (Assessment / PD) ... 30
Technical Requirements (SD) ... 34
TFC (Enabling Statute) ... 9
TFC (FDC Activities and Limits) ... 9

TGC 2151 (State Purchasing and General Services Act) 9
TGC 2152 (Texas Facilities Commission) 9
TGC 2155 (Purchasing General Rules and Procedures) 9
TGC 2156 (Purchasing Methods) 9
TGC 2157 (Purchasing Purchase of Automated Information Systems) 9
TGC 2158 (Purchasing Miscellaneous Provisions for Purchase of Certain Goods and Services) 9
TGC 2161 (Historically Underutilized Businesses) 9
TGC 2162 State Council on Competitive Government) 9
TGC 2163 (Commercially Available Activities) 9
TGC 2165 5
TGC 2165 (State Buildings, Grounds, and Property) 9
TGC 2166 (Building Construction and Acquisition) 9, 12, 13, 17, 42
TGC 2167 (Lease of Space for State Agencies) 9
TGC 3151 (Preservation of View of State Capitol) 11
TGC 417 (State Fire Marshal) 15
TGC 469 (Elimination of Architectural Barriers) 15
THC (Texas Historical Commission) 24
Uniform and Supplemental General Conditions 17
Uniform General Conditions 17
Web Links 109, 110, 111

Return to Table of Contents

DocuSign Envelope ID: 4D7A9C98-4F30-4D1D-907E-9A92F807637B

EXHIBIT D

PROFESSIONAL SERVICES SCHEDULE.

DocuSign Envelope ID: 4D7A9C98-4F30-4D1D-907E-9A92F807637B

TFC - 5 Bldg MEP DM 16-17 Design Schedule

Updated 03-04-2020

Bid Package	Description	Days	Start	Finish
Assessment INS/PDB/SCB/TCC/SHB	Assessment for the reconciliation of current Deficiency List Mechanical items (and those related to Mechanical). Update current Deficiency List with respect to items already completed or remedied in previous design/construction phases.			
	NTP-Assessment		4/1/2020	
	Field Verification and pre-work	91	4/1/2020	7/1/2020
	Preliminary Report	49	7/1/2020	8/19/2020
	TFC Review and Comment	21	8/19/2020	9/9/2020
	A/E Reply to TFC Comments	14	9/9/2020	9/23/2020
	100% Issue	21	9/23/2020	10/14/2020
Package-1 TCC MEP	TCC MEP Replacements Scope – Replacement of all TCC AHUs, hydronic pumps, DCW booster pump, and steam PRV. Cleaning, coating, and leak sealing of exhaust air and outside air ductwork.			
	NTP-Package-1		4/1/2020	
	Field Verification and pre-work	21	4/1/2020	4/22/2020
	Concept/SD/DDs for TFC Review	35	4/22/2020	5/27/2020
	OPCCs by A/E and CMR	14	5/27/2020	6/10/2020
	TFC Review and Comment	7	6/10/2020	6/17/2020
	A/E Reply to TFC Comments	7	6/17/2020	6/24/2020
	TFC NOA for 65% CDs	0	6/24/2020	6/24/2020
	65% CDs for TFC Review	35	6/24/2020	7/29/2020
	OPCCs by CMR	7	7/29/2020	8/5/2020
	TFC Review and Comment	7	8/5/2020	8/12/2020
	A/E Reply to TFC Comments	7	8/12/2020	8/19/2020
	TFC NOA for 90% CDs	7	8/19/2020	8/26/2020
	90% CDs for TFC Review	21	8/26/2020	9/16/2020
	OPCCs by CMR	0	9/16/2020	9/16/2020
	TFC Review and Comment	7	9/16/2020	9/23/2020
	A/E Reply to TFC Comments	7	9/23/2020	9/30/2020
	TFC NOA for 100% CDs	0	9/30/2020	9/30/2020
	100% CDs	14	9/30/2020	10/14/2020
	Construction	339	10/14/2020	9/18/2021
	Warranty	365	9/18/2021	9/18/2022

DocuSign Envelope ID: 4D7A9C98-4F30-4D1D-907E-9A92F807637B

Future Packages	Mixed Buildings – Scope of work to be determined based on results of assessments and the confidence of the CMR/TFC regarding the scope elements constructible within available funds.			
	NTP-Future-Packages		10/14/2020	
	Field Verification and pre-work	21	10/14/2020	11/4/2020
	Concept/SD/DDs for TFC Review	35	11/4/2020	12/9/2020
	OPCCs by A/E and CMR	0	12/9/2020	12/9/2020
	TFC Review and Comment	7	12/9/2020	12/16/2020
	A/E Reply to TFC Comments	7	12/16/2020	12/23/2020
	TFC NOA for 65% CDs	0	12/23/2020	12/23/2020
	65% CDs for TFC Review	35	12/23/2020	1/27/2021
	OPCCs by CMR	0	1/27/2021	1/27/2021
	TFC Review and Comment	7	1/27/2021	2/3/2021
	A/E Reply to TFC Comments	7	2/3/2021	2/10/2021
	TFC NOA for 90% CDs	0	2/10/2021	2/10/2021
	90% CDs for TFC Review	14	2/10/2021	2/24/2021
	OPCCs by CMR	0	2/24/2021	2/24/2021
	TFC Review and Comment	7	2/24/2021	3/3/2021
	A/E Reply to TFC Comments	7	3/3/2021	3/10/2021
	TFC NOA for 100% CDs	0	3/10/2021	3/10/2021
	100% CDs	14	3/10/2021	3/24/2021
	Construction	178	3/24/2021	9/18/2021
	Warranty	365	9/18/2021	9/18/2022

(1) Bid Packages and schedules are preliminary placeholders. Modifications will occur once the CMR is engaged in the project/process.

DocuSign Envelope ID: 4D7A9C98-4F30-4D1D-907E-9A92F807637B

EXHIBIT E

LIST OF A/E PROJECT MANAGER AND SUBCONTRACTORS

DocuSign Envelope ID: 4D7A9C98-4F30-4D1D-907E-9A92F807637B

TFC Contract No. 20-057-000
RFQ No. 303-0-00209
TFC Project No. 20-004-5051
EXHIBIT E

LIST OF CONTRACTOR PROJECT MANAGER AND SUBCONTRACTORS (Name, Address & Contact Person (Project Manager))

A. Project Manager:		Cameron Labunski, P.E. Tom Green & Company Engineers, Inc. 3701 Executive Center Drive, Suite 258 Austin, TX 78731 (512) 796-7714 cameronl@tgce.com
B. Subcontractors:		
	1.	Michelle Rossomando, AIA McKinney York Architects 1301 east seventh street Austin, Texas 78702 Office: (512) 476-0201 mross@mckinneyyork.com
	2.	Dante Angelini, P.E. Structures 6926 N Lamar Blvd Austin, Texas 78752 (512) 499-0919 dante@structures.com
	3.	Matthew Carlton, P.E. Wiss, Janney, Elstner Associates, Inc. 9511 N. Lake Creek Parkway Austin, Texas 78717 (512) 835-0940 mcarlton@wje.com

DocuSign Envelope ID: 4D7A9C98-4F30-4D1D-907E-9A92F807637B

EXHIBIT F

CRIMINAL BACKGROUND CHECKS AND APPLICATION GUIDELINES.

DocuSign Envelope ID: 4D7A9C98-4F30-4D1D-907E-9A92F807637B

TEXAS FACILITIES COMMISSION CRIMINAL BACKGROUND CHECKS AND APPLICATION GUIDELINES

It is the policy of the Texas Facilities Commission ("TFC") that all contractor employees and subcontractors that will complete any work on-site at a state-owned property shall be subject to a criminal background check. Any expense associated with such criminal background check shall be borne by the contractor. Contractor employees and subcontractors who work on TFC contracts are required to submit to a criminal history background check. A complete criminal background check shall be completed before any employee performs services at the site. Criminal background checks must be performed by the Texas Department of Public Safety ("DPS") and must be on the form provide by TFC.

I. CRIMINAL HISTORY CRITERIA

Employers should use the following criminal history criteria when hiring employees to perform work for TFC. Any employee failing to meet the minimum standard will be denied. If special circumstances exist, please contact the TFC representative for clarification or further consideration.

A conviction or deferred adjudication for one of the following offenses will result in the **permanent disqualification** of a person from eligibility to provide contractual services with Texas Facilities Commission:

(i) any act causing death as defined in Texas Penal Code; and

(ii) any felony or misdemeanor involving arson, burglary, breach of computer security, credit card abuse, counterfeiting, forgery, kidnapping, robbery, stalking, terroristic threat, theft, and any sexual offense designated as a felony in Texas Penal Code.

Additionally, anyone who has a current duty to register as a sex offender, is under indictment or is a fugitive from justice is disqualified.

DocuSign Envelope ID: 4D7A9C98-4F30-4D1D-907E-9A92F807637B

Texas Facilities Commission---Criminal Background Checks and Application Guidelines

For individuals who have a conviction or deferred adjudication for felonies not enumerated above, 10 years must have passed from the time of disposition or discharge of probation in order for that person to be eligible to provide contractual services with the TFC.

For individuals who have a misdemeanor conviction or deferred adjudication for misdemeanors not enumerated above, 5 years must have passed from the time of disposition or discharge of probation in order for that person to be eligible to provide contractual services with the TFC.

II. CRIMINAL BACKGROUND PROCESS

DPS has entered into an exclusive contract with IdentoGO Centers, formerly L-1 Enrollment Services, operated by MorphoTrust USA. IdentoGO by MorphoTrust is the exclusive live scan fingerprinting provider for DPS. All TFC contractors that are subject to TFC criminal background check requirements must create an account with IdentoGO in accordance with the IdentoGO Account Application and requirements attached hereto as "Attachment A". Thereafter, all contractor employees and subcontractors must follow the registration procedures attached hereto as "Attachment A" including using the ***Texas Facilities Commission Service Code 11G6ZN.*** All necessary instructions and information to schedule a fingerprint appointment is included in Attachment A. In addition, the only service code accepted by DPS for a TFC criminal background check is the service code provided in Attachment A, hereto, therefore, if an individual does not use the service code in Attachment A, he or she may be required to repeat the process at the expense of contractor. Contractors can began the process by simply clicking on this link:
https://uenroll.identogo.com/servicecode/11G6ZN

Additionally, forms and instructions can be found on the IdentoGO website at http://www.identogo.com by clicking on the State of Texas. Links on that page include one for online scheduling and a list for the state-wide fingerprinting locations. The waiver form for the criminal background check is attached hereto as "Attachment B". In the event Contractor needs to set up a new account, please refer to the attached link for instructions: http://www.l1enrollment.com/state/forms/tx/566718664f05a.pdf.

III. CRIMINAL HISTORY ERROR RESOLUTION

The Error Resolution Unit ("ER") is responsible for updating and evaluating possible errors in criminal history records. Potential errors are reported to ER by law enforcement, judicial agencies, as well as private citizens.

If an applicant would like to make a request that a criminal history record be updated or corrected, the applicant will need to supply certified documents to the ER. Required forms and additional information submit a correction request to the ER can be found at:

http://txdps.state.tx.us/administration/crime_records/pages/errorresolution.htm.

IV. TFC CONTACTS

For any questions involving the TFC criminal background check process, please contact the following:

DocuSign Envelope ID: 4D7A9C98-4F30-4D1D-907E-9A92F807637B

Texas Facilities Commission---Criminal Background Checks and Application Guidelines

Tommy Oates, Deputy Executive Director
Office: 512-463-3057
Cell: 512-463-3376
Email: tommy.oates@tfc.state.tx.us

Mandy Burrell, Manager
Office: 512-463-1799
Cell: 512-247-1290
Email:
mandy.burrell@tfc.state.tx.us

DocuSign Envelope ID: 4D7A9C98-4F30-4D1D-907E-9A92F807637B

Texas Facilities Commission---Criminal Background Checks and Application Guidelines

ATTACHMENT A

Facilities Commission (ORI Facilities Commission/Service Code 11G6ZN)

The general process for electronic fingerprinting is:

1. Schedule an appointment to be electronically fingerprinted by MorphoTrust USA at one of their IdentoGo enrollment centers.
    - Internet based scheduling is the quickest and most convenient way to obtain a fingerprint appointment.
        a. **You may begin the process now by simply clicking on this link: https://uenroll.identogo.com/servicecode/11G6ZN**
        b. Provide all required pre-enrollment data and select a convenient date and time for your appointment
    - If you prefer to schedule over the telephone, you must:
        a. Have your Service Code ready (**11G6ZN**), then call **888.467.2080**;
        b. MorhphoTrust will prompt you for the Service Code (**11G6ZN**);
        c. Provide all required pre-enrollment data and select a convenient date and time for your appointment
2. Arrive at your scheduled appointment with your photo identification and fee
    - If you plan on bringing a form of identification other than a valid (unexpired) TX Driver License, please refer to the Department of Public Safety's acceptable document types here: http://www.l1enrollment.com/state/forms/tx/55fc619a7f7aa.doc
    - MorphoTrust accepts Visa/MasterCard/Discover/American Express, business checks, money orders and coupon codes (employer accounts) at the time of service.
    - Please note that personal checks and cash are **not accepted**.
3. Your fingerprints will be submitted electronically to DPS and the FBI. You will not receive a printed fingerprint card.
4. At the conclusion of your appointment, the MorphoTrust enrollment agent will provide you with an IdentoGo receipt stating that you were fingerprinted.
    - Do not throw away the receipt;
    - You may check status on your submission by clicking on this link: **https://uenroll.identogo.com/servicecode/11G6ZN** and then;
    - Click "**Check Status**"

Fingerprints provided for this application shall be used to check criminal history records of the Texas Department of Public Safety and the Federal Bureau of Investigation, in accordance with applicable statutes.

DocuSign Envelope ID: 4D7A9C98-4F30-4D1D-907E-9A92F807637B

Texas Facilities Commission---Criminal Background Checks and Application Guidelines

ATTACHMENT B

DocuSign Envelope ID: 4D7A9C98-4F30-4D1D-907E-9A92F807637B

IdentoGO
By MorphoTrust USA

Texas Fingerprint Service Code Form

Facilities Commission

Service Name: Facilities Commission

To schedule your ten-minute fingerprint appointment, simply visit **https://uenroll.identogo.com** and enter the following Service Code

11G6ZN

Service Code is unique to your hiring/licensing agency. Do not use this code for another purpose.

Background Check Waiver

I certify that all information I provided in relation to this criminal history record check is true and accurate. I authorize the Texas Department of Public Safety (DPS) to access Texas and Federal criminal history record information that pertains to me and disseminate that information to the designated Authorized Agency or Qualified Entity with which I am or am seeking to be employed or to serve as a volunteer, through the DPS Fingerprint-based Applicant Clearinghouse of Texas and as authorized by Texas Government Code Chapter 411 and any other applicable state or federal statute or policy.

I authorize the Texas Department of Public Safety to submit my fingerprints and other application information to the FBI for the purpose of comparing the submitted information to available records in order to identify other information that may be pertinent to the application. I authorize the FBI to disclose potentially pertinent information to the DPS during the processing of this application and for as long hereafter as may be relevant to the activity for which this application is being submitted. I understand that the FBI may also retain my fingerprints and other applicant information in the FBI's permanent collection of fingerprints and related information, where all such data will be subject to comparisons against other submissions received by the FBI and to further disseminations by the FBI as may be authorized under the Privacy Act of 1974 (5 USC 552a). I understand my fingerprints will be searched by and against civil, criminal and latent fingerprints in the Next Generation Identification (NGI) system. I understand I am entitled to obtain a copy of any criminal history record check and challenge the accuracy and completeness of the information before a final determination is made by the Qualified Entity. I also understand the Qualified Entity may deny me access to children, the elderly, or individuals with disabilities until the criminal history record check is completed. If a need arises to challenge the FBI record response, you may contact the agency that submitted the information to the FBI, or you may send a written challenge request to the FBI's Criminal Justice Information Services (CJIS) Division at FBI CJIS Division, Attention: Correspondence Group, 1000 Custer Hollow Road, Clarksburg, WV 26306.

Don't have access to the Internet? You can still schedule an appointment by calling 888.467.2080

DocuSign Envelope ID: 4D7A9C98-4F30-4D1D-907E-9A92F807637B

EXHIBIT G

A/E'S PROPOSAL DATED DECEMBER 16, 2019.

DocuSign Envelope ID: 4D7A9C98-4F30-4D1D-907E-9A92F807637B

Tom Green & Company Engineers, Inc.

December 16, 2019 PN 119015

Mr. Billy Knapp
Texas Facilities Commission
1711 San Jacinto Blvd
Austin, TX 78701

SUBJECT: TFC MEP Deferred Maintenance at Multiple Buildings in Austin Project: Agreement for Engineering and Architectural Services

Dear Billy:

We appreciate this opportunity to present our proposal for engineering and architectural services for the subject project.

As I understand the project, it consists of engineering, architectural, and other consulting services for assessment and design of certain renovations to mechanical systems at the Insurance (INS), Price Daniel Sr. (PDB), Supreme Court (SCB), Sam Houston (SHB), and Tom C. Clark (TCC) Buildings.

Phases included as a portion of this proposal are: pre-design phase - assessment and conceptual design; design phases - schematic design, design development, and construction documents; bid/negotiation phase; and construction administration phase. While this proposal addresses all phases of work, undefined portions of the design, bid/negotiation, and construction administration phases will adjust based on the results of the assessment.

The combined assessments from TGCE and its consultants will offer general assessments, summary recommendations, and opinions of probable construction costs (OPCCs). From these efforts and the integral collaboration with TFC, the team will make consensus determinations for the design and construction/renovation scope and approach for items not specifically identified in this proposal. These determinations are expected to include prioritization, phasing, and cost considerations which are not evident at this time.

To better define the expected engineering and architectural scope, I offer the following outline of Basic Services:

The Deferred Maintenance Project at these 5 project buildings is an atypical project in virtually all respects. The scope set forth herein is therefore intended to supplement, modify, and/or clarify the Basic Services Scope intent for this project, recognizing some elements of these Basic Services are traditionally outside the basic scope of services for a more typical project. It should also be noted that the design effort for many of the scope elements will be significantly disproportionate to the construction costs. Finally, it is expected that the project construction scope (and related design efforts) will strategically adjust to achieve the most construction scope for the available construction funds. Multiple bid packages, design alternates, allowances, unit pricing, and/or other tools will likely be used to accommodate this objective.

Due in part to the special character of this project, there are in some cases reasonable possibilities that conditions will be discovered that merit other services which are currently excluded, not

DocuSign Envelope ID: 4D7A9C98-4F30-4D1D-907E-9A92F807637B

requested, or otherwise not known to be needed. We call these items "unknown unknowns". If such needs arise, the particular condition will be evaluated amongst the project team (TFC and A/E with pertinent consultants, perhaps including the CMR where appropriate) to determine a course of action.

A. General Scope Overview:

General scope of the A/E, common to all disciplines/consultants:

1. Critically review documents and closely coordinate with all team members relevant to individual scopes of a particular discipline/consultant.

2. Include thorough review of and periodic coordination with other affected disciplines/consultants and with CMR for performance, constructability, schedule, and cost, as applicable to the particular endeavor.

3. Maintain work progress and products consistent with the schedule.

4. Provide supplemental information beyond that presented in submission of documents which may be reasonably requested to assist OPCC development by the A/E team and/or the Owner's CMR.

5. Promptly communicate with pertinent parties, including topics regarding information needs and responses to needs of other parties.

6. Actively participate in meetings and/or teleconferences to bring appropriate expertise and recommendations to the project as they may pertain to the overall project or to a specific discipline. Unless indicated otherwise (fewer or greater meetings participation), meetings are envisioned to be up to the following:

   a. Assessment phase: monthly for a period of six months

   b. Design and bid phases: monthly for a period of eighteen months

   c. Construction phase: semi-monthly for a period of eighteen months

   Project meetings represented above anticipate a completion of construction phase meetings by the end of 2022 Fiscal Year (August 30, 2022).

7. During periods when assessment, design, or construction phases occur simultaneously, the above meetings are envisioned to occur in a back-to-back meeting scenario to allow for improved efficiency of the project team. It is envisioned that meetings will be approximately 2-hours per typical meeting, with a total of 10 person-hours (of mid to senior level staff) assigned for each meeting (for preparation, attendance, and minutes/records).

8. Prepare meeting agendas and meeting minutes, field reports, and other similar documentation. (Prime consultant is responsible for minutes when prime consultant is in attendance. Where TGCE's sub-consultant is the respective Task Leader, it will be responsible for meeting minutes.)

DocuSign Envelope ID: 4D7A9C98-4F30-4D1D-907E-9A92F807637B

TFC MEP Deferred Maintenance at Multiple Buildings in Austin Project: Agreement for Engineering and Architectural Services

9. Each consultant (prime and sub-consultant) engaged in the respective bid package phases included below will prepare, coordinate (internally and amongst the team), and submit phase/progress documents consistent with the following:

    a. Combined Concept Design/Schematic Design (as needed for specific scope items, to include a basis of design narrative, drawings, no specifications)

    b. 50% Construction Documents (CDs - further developed drawings, and full specifications)

    c. 90% Construction Documents (completed documents excepting minor details being finalized)

    d. 100% Construction Documents (issued after final coordination/quality control process and Owner's review)

10. Provide multiple construction document packages to coordinate with CMR's construction schedule (up to 2-separate design/construction packages). Design/construction packages are to be determined in coordination with CMR, once under contract. Coordinated packages are intended to allow for multiple construction stages where required to accommodate construction sequencing. Our currently envisioned design/construction packages include:

    a. Bid Package-1: TCC AHUs and VAVs Replacement Scope – Replacement of all AHUs, OAHU, and VAV terminal boxes. Replacement of existing HVAC controls. Replace chilled/heating water pumps and steam to heating water converters. Clean/coat/leak seal all supply/return/outside/exhaust air ductwork not replaced.

    b. Future Packages: Undefined – Scope of work to be determined based on the results of the supplementary assessments and the confidence of the CMR/TFC regarding the scope elements constructible within future funds that may become available. Future packages scope is not included in the current proposal.

    The proposal understands or presumes the following progression of and efficiency of the services (for each design/construction package): a) Schematic Design/Design Development progresses with reasonable convergence so that major plan, scope or design approach changes are not made which significantly impact the design or its related construction cost and design effort; b) Contract Documents progress with reasonable convergence so that plan, scope, or design approach changes are minor only in nature and do not significantly impact the design effort or construction cost; and c) a direction to proceed into the next (sequential) phase of services includes the implicit approval of accompanying floor plans and other designs created to that date (excepting written comments to the contrary).

11. Each consultant engaged for Contract Bidding and Award phase (CBA) and for construction administration (CA) phase shall include the following as pertaining to the particular discipline:

    a. Critically review submittals.

DocuSign Envelope ID: 4D7A9C98-4F30-4D1D-907E-9A92F807637B

b. Unless indicated otherwise, attend construction meetings pertinent to the particular discipline and status of construction, perform critical construction observations, and issue field reports.

c. Perform substantial completion site reviews for each stage of construction, and issue field reports.

d. As requested, performing Commissioning Verifications (CxV) and serving as a Commissioning Authority (CxA) have been excluded from the Basic Services scope of services. However, included in our basic scope is coordinating with the CxA for the following: providing review packages; receipt and consideration of comments; coordination of specifications for consistency with the CxA's scope of work; coordination with CMR for delivery of submittals for the CxA's review; and assisting in scheduling the CxA's activities during construction.

e. Perform final completion site review for each stage of construction, and issue field report.

f. Prepare record drawings based upon field observations and CMR's as-built drawings mark-up submittals.

B. <u>Summary of Scope Elements</u>

To better define the expected engineering and architectural design scope, I offer the following outline of Basic Services to summarize the elements selected by the TFC project team.

1. Deficiency List Items' Assessments for each building:

   a. Assessment for the reconciliation of current Deficiency List I-A, II-A, I-B, & II-B Mechanical items (and those related to Mechanical). Update current Deficiency List with respect to items already completed or remedied in previous design/construction phases. Items indicated as "Maintenance Item" will not be included in the assessment.

2. TCC MEP Design Bid Package-1 (AHU and VAV Replacements):

   a. Design replacement of 10 existing AHUs on all floors with existing single-duct AHUs. Assessment will be performed for the AHU replacements in conjunction with the early phases of design, as a previous assessment is not currently relevant.

      Remove existing single duct AHUs and replace with new institutional grade field fabricated single-duct AHUs (excludes Elevator Equipment Room, Data Center, and Computer Room AHUs), VFDs, controls, and accessories. Design will not extend beyond (approximately) limits of respective AHU's mechanical room. Design of AHU systems will include knock-down/de-mounted or field constructed AHUs with 3-dimensional drawings of mechanical room, respective room equipment, and AHU to allow for replacement of systems on an AHU by AHU basis over a single weekend or other short duration.

      Remove and replace chilled and heating water pumps and steam to heating water convertors.

DocuSign Envelope ID: 4D7A9C98-4F30-4D1D-907E-9A92F807637B

Clean/coat/leak seal exhaust air ductwork.

C. Understandings of Proposal Exclusions:

It is understood that the following items are currently not requested, not applicable, or not expected to be needed by this team. To the extent scope is determined to be otherwise as the project evolves, related scope is subject to additional services.

1. Assessment and Design of systems will be limited to those indicated herein, excluding the following systems' assessments/services: hazardous materials, environmental impact, data, public address systems, furniture/fixtures/equipment, occupant load, energy calculations/modeling, operating concept analysis, life cycle cost analysis, lighting, parking, paving, site drainage, landscaping, site utilities, zoning services, permitting, certification of roof level anchor points, testing/laboratory services, provision of controls/elevator/other technicians required to access assessed systems.

2. Assessment and Design of the following systems will be limited to items that are related to scope of work items included in this proposal (i.e., relocation of fire sprinkler piping and heads to accommodate MEP systems' work), as no specific scope items have been identified: fire alarm, fire sprinkler, interior/exterior finishes, and structure/foundation.

3. Unless specifically indicated otherwise in the scope intents within, it is presumed that existing conditions are suitably functional and code compliant as not to trigger work beyond that described herein. Accordingly, additional function or code improvements to existing conditions are excluded.

4. Coordinating with departments for details or planning regarding disruptions/occupant relocations/etc. related to construction processes is not included in basic scope. (TGCE will coordinate with TFC and respective Building Manager for general provisions and limitations.)

5. All design tasks are based upon existing fixed partitions to remain in place in all subject buildings. Only finishes directly related to project scope are subject to Basic Services architectural/engineering design.

6. Providing opinions of probable construction (or other) costs not directly related to design scopes included in this proposal.

7. Opinions of Probable Construction Costs will be performed by TGCE and its subconsultants through design development. All OPCCs after Design Development are to be performed by CMR with review by design team members.

8. Contract Bidding and Award and Construction Administration services for items not directly related to design scopes included in this proposal.

9. Design of additional scope items to meet overall available project construction budget, other than those possibly within the additional design allowance proposed below.

DocuSign Envelope ID: 4D7A9C98-4F30-4D1D-907E-9A92F807637B

TFC MEP Deferred Maintenance at Multiple Buildings in Austin Project: Agreement for Engineering and Architectural Services

10. Construction phase support services related to extended construction durations beyond those indicated in this proposal (above).

11. Design for corrections to non-compliant life safety or ADA/TAS conditions, (even if advisable or required within the scope of the intended project).

12. Energy modeling, other than simple efficiency comparisons.

13. SECO analysis for alternative energy systems will not be included where modification of energy using systems for individual solicitation packages do not exceed major project size definition by SECO (understood to be $2,000,000).

14. LEED or other sustainable project systems.

15. Testing, Adjusting, and Balancing (TAB) of HVAC systems, both TAB pre-audit and TAB of installed systems. TAB is understood to be performed by Owner Contracted TAB Firm.

16. Development of ACAD, Revit, or other floor plans/backgrounds of as-built conditions. Our proposal presumes that existing drawings in ACAD or Revit format will be provided to the design team by the Owner and will reasonably represent the built conditions of architectural, structural, mechanical, electrical, and plumbing systems. If our assessment and design phase site visits reveal discrepancies between available drawings and observed conditions, and these discrepancies appear to be potentially significant regarding the assessment scope, we will advise you of same. At that time, we can offer a proposal for further examination or evaluation of existing conditions, or otherwise collaborate so that the issues posed by the discrepancies can be addressed.

DocuSign Envelope ID: 4D7A9C98-4F30-4D1D-907E-9A92F807637B

TFC MEP Deferred Maintenance at Multiple Buildings in Austin Project: Agreement for Engineering and Architectural Services

D. Basic Services Fee

As is customary, we have estimated our fees using several methods. We propose the average of these methods, **$1,510,000 be the Basic Services fee,** including traditional reimbursable items.

The above fee is allocated to each scope item per the below fee schedule. The fee allocation per scope item requires that all scope items are performed and are done so concurrently to the extent possible. In the event that one or more design scope assessments are removed from the project, or that reasonable concurrence of the services is not achievable, other scope/building fees will naturally adjust according to the reduced scope and less efficient economy of scale. The intent of this proposal is to reasonably define assessment and design scopes to address all phases of work, although the fees for design, bid/negotiation, and construction administration phases will adjust based on the results of the assessment.

Scope	Assessment/ Concept Fee
Deficiency List I-A/II-A/I-B/II-B Assessment	$180,000
Sub-Total	**$180,000**

The above assessment phase will be billable by effort expended based on hourly personnel costs expended in each billing period, with all unused portions of the assessment fees available for use in the below "Assessments' Future Design Allocation". Additional assessment items requested by TFC beyond those included in this proposal may also be accomplished inside of this Assessment fee allocation, to the extent that fees are available.

Scope	Design, Bid/Negotiation, C/A Fee
TCC AHUs and VAVs	$1,180,000
Assessments' Future Design Allocation	$150,000
Sub-Total	**$1,330,000**

The approximate fee breakdown by phase for the above Design is as follows: Schematic Design through Contract Documents - 75%; Bid Negotiation/Construction Administration - 25%.

The below table represents that Total Fee for the combination of Assessment and Design/CA for this project.

Scope	Fee
Assessments	$180,000
Design/CA	$1,330,000
Proposal Fee Total	**$1,510,000**

DocuSign Envelope ID: 4D7A9C98-4F30-4D1D-907E-9A92F807637B

TFC MEP Deferred Maintenance at Multiple Buildings in Austin Project: Agreement for Engineering and Architectural Services

E. Additional Services:

It is sometimes asked that we attempt to identify project elements which may create the need for Additional Services. Other than those related to understandings expressed above, I do not believe the likelihood for Additional Services to be significant. Occasionally, revisions to previously approved work, revisions to previously given instructions, discovery of unexpected conditions, significant delays or "holding patterns" in the conduct of the project, or expansion of scope do present an appropriate case for Additional Services. If such conditions arise, we would advise you of same and seek an equitable compensation for the related work.

Additionally, TFC has routinely requested the assessment, design, and C/A support for additional scope items beyond those currently presented. As such, those additional Owner initiated scope items would be subject to Additional Services.

We attempt to extend the benefit of the doubt to others in this respect, recognizing of course that there are business limits to this benefit of the doubt. It is rare that a request for Additional Services from this office is not understood and readily accepted by our clients.

F. Acceptance

If this proposal is acceptable to you, please provide an approval consistent with your normal procedures. Should there be any questions or requested changes, please contact me to go over them at your earliest opportunity.

We appreciate this opportunity to be of continued service to you and the TFC, and look forward to a successful project!

Sincerely,

Cameron Labunski, P.E.
Principal Engineer

Texas Firm Registration No. 2929

CL:cl

DocuSign Envelope ID: 4D7A9C98-4F30-4D1D-907E-9A92F807637B

EXHIBIT H

APPROVED HUB SUBCONTRACTING PLAN

DocuSign Envelope ID: 4D7A9C98-4F30-4D1D-907E-9A92F807637B

Texas Facilities Commission (TFC)
HUB Program
EVALUATION OF RESPONDENT'S HUB SUBCONTRACTING PLAN (HSP)

Instructions: This evaluation must be completed for each response before it can be considered further. Please complete a separate evaluation sheet for each response within five (5) business days after the opening date of the solicitation.

Section I:

Name of Respondent: Tom Green and Company Engineers

Name of Project: 20-21 DM MEP of Misc. Building in Austin, TX

Contract #: Req# 303-0-00209 PO: Project#
RFQ # RFP #: IFB #:

Services ☐ **AE:** ☒ **CMR:** ☐ **RC:** ☐ **IDIQ:** ☐ **Delivery Release: Assignment #: Amendment # GMP#: POCN #: REVISION:**

TFC HUB Coordinator has reviewed the above referenced HSP response to this solicitation and finds that the HSP:

☒ **complies with** ☐ **does not comply with**

Method Used To Achieving HUB Compliance:

The Respondent solicited 3 HUB per subcontracting opportunities and 2 Minority Trade Organization and allowed 7 working days for a response; this meets Good Faith Effort (GFE) per TAC Rules 20.14(d)(D)(i).

Yolanda Strey 11/22/19

Print/Type Name: TFC HUB Director/Date

Section II:

	YES	NO	N/A
Does the respondent intend to subcontract?	☒	☐	☐

Instructions: If **"Yes,"** do not proceed to the following questions. If **"No,"** proceed to the next question.

Comments:

Did the respondent verify that no subcontractors would be used in the performance of the work (verification must be provided on the form prescribed in the solicitation).	☐	☒	☐

Section III:

Respondents who DO intend to subcontract:

	YES	NO
1. Did the respondent divide the work into reasonable portions, consistent with prudent industry practices (Identified the areas of subcontracting)?B	☒	☐

Comments:

DocuSign Envelope ID: 4D7A9C98-4F30-4D1D-907E-9A92F807637B

Texas Facilities Commission (TFC)
HUB Program
EVALUATION OF RESPONDENT'S HUB SUBCONTRACTING PLAN (HSP)

	N/A	YES	NO
2. Did the respondent provide notice to HUBs of the work that the respondent intends to subcontract, in accordance with 1 T.A.C. Section 111.14?	☐	☒	☐

Comments:

	YES	NO	N/A
3. Did the respondent include an executed Mentor Protégé Agreement (per Section 2161.065 Government Code), registered with TPASS? Does the HUB subcontracting plan identify the area(s) of subcontracting the protégé will perform? (Submission of a protégé as a subcontractor constitutes a good faith effort for the particular area to be subcontracted with the protégé).	☐	☒	☐

Comments:

	YES	NO	N/A
4. Did the respondent provide written justification of the selection process if a non HUB subcontractor was selected by a process other than by competitive bidding, or a HUB bid was the best value responsive bidder to a competitive bid invitation, but was not selected?	☒	☐	☐

Comments:

	YES	NO	N/A
5. Did the respondent provide notice to minority or women trade organizations or development centers to assist in identifying HUBs by disseminating subcontracting opportunities to their membership/participants? Did the notice in all instances, include the scope of the work, specifications, and identify a contact person? Did Respondent provide notice to organizations or development centers no less than five (5) working days for construction contracts prior to submission of the response (bid, proposal, offer, or other applicable expression of interest)?	☒	☐	☐

Comments:

DocuSign Envelope ID: E41478E7-D865-43C1-9EC6-D3C51788A608

Rev 2/17

HUB Subcontracting Plan (HSP)

In accordance with Texas Gov't Code §2161.252, the contracting agency has determined that subcontracting opportunities are probable under this contract. Therefore, all respondents, including State of Texas certified Historically Underutilized Businesses (HUBs) must complete and submit this State of Texas HUB Subcontracting Plan (HSP) with their response to the bid requisition (solicitation).

NOTE: Responses that do not include a completed HSP shall be rejected pursuant to Texas Gov't Code §2161.252(b).

The HUB Program promotes equal business opportunities for economically disadvantaged persons to contract with the State of Texas in accordance with the goals specified in the 2009 State of Texas Disparity Study. The statewide HUB goals defined in 34 Texas Administrative Code (TAC) §20.284 are:

- ***11.2 percent for heavy construction other than building contracts,***
- ***21.1 percent for all building construction, including general contractors and operative builders' contracts,***
- ***32.9 percent for all special trade construction contracts,***
- ***23.7 percent for professional services contracts,***
- ***26.0 percent for all other services contracts, and***
- ***21.1 percent for commodities contracts.***

- - Agency Special Instructions/Additional Requirements - -

In accordance with 34 TAC §20.285(d)(1)(D)(iii), a respondent (prime contractor) may demonstrate good faith effort to utilize Texas certified HUBs for its subcontracting opportunities if the total value of the respondent's subcontracts with Texas certified HUBs meets or exceeds the statewide HUB goal or the agency specific HUB goal, whichever is higher. When a respondent uses this method to demonstrate good faith effort, the respondent must identify the HUBs with which it will subcontract. If using existing contracts with Texas certified HUBs to satisfy this requirement, only the aggregate percentage of the contracts expected to be subcontracted to HUBs with which the respondent does not have a continuous contract in place for more than five (5) years shall qualify for meeting the HUB goal. This limitation is designed to encourage vendor rotation as recommended by the 2009 Texas Disparity Study.*

SECTION 1: RESPONDENT AND REQUISITION INFORMATION

a. Respondent (Company) Name: Tom Green and Company Engineers, Inc. State of Texas VID #: 1742588219200

Point of Contact: Michael Wong Phone #: 512-345-7793

E-mail Address: mikew@tgce.com Fax #: 512-345-7201

b. Is your company a State of Texas certified HUB? ☐ - Yes ☑ - No

c. Requisition #: 303-0-00209 Bid Open Date: 11/20/2019 (mm/dd/yyyy)

DocuSign Envelope ID: 4D7A9C98-4F30-4D1D-907E-9A92F807637B

Enter your company's name here: _____ Requisition #: _____

SECTION 2: RESPONDENT'S SUBCONTRACTING INTENTIONS

After dividing the contract work into reasonable lots or portions to the extent consistent with prudent industry practices, and taking into consideration the scope of work to be performed under the proposed contract, including all potential subcontracting opportunities, the respondent must determine what portions of work, **including contracted staffing, goods and services will be subcontracted.** Note: In accordance with 34 TAC §20.282, a "Subcontractor" means a person who contracts with a prime contractor to work, to supply commodities, or to contribute toward completing work for a governmental entity.

a. Check the appropriate box (Yes or No) that identifies your subcontracting intentions:

☑ - *Yes*, I will be subcontracting portions of the contract. (If *Yes*, complete Item b of this SECTION and continue to Item c of this SECTION.)

☐ - *No*, I will not be subcontracting any portion of the contract, and I will be fulfilling the entire contract with my own resources, including employees, goods and services. (If *No*, continue to SECTION 3 and SECTION 4.)

b. List all the portions of work (subcontracting opportunities) you will subcontract. Also, based on the total value of the contract, identify the percentages of the contract you expect to award to Texas certified HUBs, and the percentage of the contract you expect to award to vendors that are not a Texas certified HUB (i.e., Non-HUB).

Item #	Subcontracting Opportunity Description	HUBs		Non-HUBs
		Percentage of the contract expected to be subcontracted to HUBs with which you do not have a continuous contract* in place for more than five (5) years.	Percentage of the contract expected to be subcontracted to HUBs with which you have a continuous contract* in place for more than five (5) years.	Percentage of the contract expected to be subcontracted to non-HUBs.
1	Architecture	2 %	%	%
2	Building Envelope	%	%	2 %
3	Structural Engineering	2 %	%	%
4		%	%	%
5		%	%	%
6		%	%	%
7		%	%	%
8		%	%	%
9		%	%	%
10		%	%	%
11		%	%	%
12		%	%	%
13		%	%	%
14		%	%	%
15		%	%	%
	Aggregate percentages of the contract expected to be subcontracted:	4 %	%	2 %

(Note: If you have more than fifteen subcontracting opportunities, a continuation sheet is available online at https://www.comptroller.texas.gov/purchasing/vendor/hub/forms.php).

c. Check the appropriate box (Yes or No) that indicates whether you will be using **only** Texas certified HUBs to perform **all** of the subcontracting opportunities you listed in SECTION 2, Item b.

☐ - *Yes* (If *Yes*, continue to SECTION 4 and complete an "HSP Good Faith Effort - Method A (Attachment A)" for **each** of the subcontracting opportunities you listed.)

☑ - *No* (If *No*, continue to Item d, of this SECTION.)

d. Check the appropriate box (Yes or No) that indicates whether the aggregate expected percentage of the contract you will subcontract **with Texas certified HUBs** with which you **do not** have a **continuous contract*** in place with for **more than five (5) years**, **meets or exceeds** the HUB goal the contracting agency identified on page 1 in the "**Agency Special Instructions/Additional Requirements.**"

☐ - *Yes* (If *Yes*, continue to SECTION 4 and complete an "HSP Good Faith Effort - Method A (Attachment A)" for **each** of the subcontracting opportunities you listed.)

☑ - *No* (If *No*, continue to SECTION 4 and complete an "HSP Good Faith Effort - Method B (Attachment B)" for **each** of the subcontracting opportunities you listed.)

***Continuous Contract**: Any existing written agreement (including any renewals that are exercised) between a prime contractor and a HUB vendor, where the HUB vendor provides the prime contractor with goods or service under the same contract for a specified period of time. The frequency the HUB vendor is utilized or paid during the term of the contract is not relevant to whether the contract is considered continuous. Two or more contracts that run concurrently or overlap one another for different periods of time are considered by CPA to be individual contracts rather than renewals or extensions to the original contract. In such situations the prime contractor and HUB vendor are entering (have entered) into "new" contracts.*

DocuSign Envelope ID: 4D7A9C98-4F30-4D1D-907E-9A92F807637B

Enter your company's name here: _____ Requisition #: _____

SECTION 3: SELF PERFORMING JUSTIFICATION (If you responded "No" to SECTION 2, Item a, you must complete this SECTION and continue to SECTION 4.) If you responded "No" to SECTION 2, Item a, in the space provided below **explain how** your company will perform the entire contract with its own employees, supplies, materials and/or equipment.

SECTION 4: AFFIRMATION

As evidenced by my signature below, I affirm that I am an authorized representative of the respondent listed in SECTION 1, and that the information and supporting documentation submitted with the HSP is true and correct. Respondent understands and agrees that, if awarded any portion of the requisition:

- The respondent will provide notice as soon as practical to all the subcontractors (HUBs and Non-HUBs) of their selection as a subcontractor for the awarded contract. The notice must specify at a minimum the contracting agency's name and its point of contact for the contract, the contract award number, the subcontracting opportunity they (the subcontractor) will perform, the approximate dollar value of the subcontracting opportunity and the expected percentage of the total contract that the subcontracting opportunity represents. A copy of the notice required by this section must also be provided to the contracting agency's point of contact for the contract no later than ten (10) working days after the contract is awarded.
- The respondent must submit monthly compliance reports (Prime Contractor Progress Assessment Report – PAR) to the contracting agency, verifying its compliance with the HSP, including the use of and expenditures made to its subcontractors (HUBs and Non-HUBs). (The PAR is available at https://www.comptroller.texas.gov/purchasing/docs/hub-forms/ProgressAssessmentReportForm.xls).
- The respondent must seek approval from the contracting agency prior to making any modifications to its HSP, including the hiring of additional or different subcontractors and the termination of a subcontractor the respondent identified in its HSP. If the HSP is modified without the contracting agency's prior approval, respondent may be subject to any and all enforcement remedies available under the contract or otherwise available by law, up to and including debarment from all state contracting.
- The respondent must, upon request, allow the contracting agency to perform on-site reviews of the company's headquarters and/or work-site where services are being performed and must provide documentation regarding staffing and other resources.

Signature	Michael Wong	Business Manager	11/20/2019
	Printed Name	Title	Date (mm/dd/yyyy)

Reminder:

- If you responded "Yes" to **SECTION 2, Items c or d**, you must complete an "HSP Good Faith Effort - Method A (Attachment A)" for **each** of the subcontracting opportunities you listed in SECTION 2, Item b.
- If you responded "No" **SECTION 2, Items c and d**, you must complete an "HSP Good Faith Effort - Method B (Attachment B)" for **each** of the subcontracting opportunities you listed in SECTION 2, Item b.

DocuSign Envelope ID: 4D7A9C98-4F30-4D1D-907E-9A92F807637B

HSP Good Faith Effort - Method B (Attachment B)

Rev. 2/17

Enter your company's name here: _____ Requisition #: _____

IMPORTANT: If you responded "*No*" to **SECTION 2, Items c** and **d** of the completed HSP form, you must submit a completed "HSP Good Faith Effort - Method B (Attachment B)" for each of the subcontracting opportunities you listed in **SECTION 2, Item b** of the completed HSP form. You may photo-copy this page or download the form at https://www.comptroller.texas.gov/purchasing/docs/hub-forms/hub-sbcont-plan-gfe-achm-b.pdf..

SECTION B-1: SUBCONTRACTING OPPORTUNITY

Enter the item number and description of the subcontracting opportunity you listed in SECTION 2, Item b, of the completed HSP form for which you are completing the attachment.

Item Number: 1 **Description:** Architecture

SECTION B-2: MENTOR PROTÉGÉ PROGRAM

If respondent is participating as a Mentor in a State of Texas Mentor Protégé Program, submitting its Protégé (Protégé must be a State of Texas certified HUB) as a subcontractor to perform the subcontracting opportunity listed in **SECTION B-1**, constitutes a good faith effort to subcontract with a Texas certified HUB towards that specific portion of work.

Check the appropriate box (Yes or No) that indicates whether you will be subcontracting the portion of work you listed in SECTION B-1 to your Protégé.

☐ - **Yes** (If *Yes*, continue to SECTION B-4.)

☑ - **No / Not Applicable** (If *No* or *Not Applicable*, continue to SECTION B-3 and SECTION B-4.)

SECTION B-3: NOTIFICATION OF SUBCONTRACTING OPPORTUNITY

When completing this section you MUST comply with items **a, b, c** and **d**, thereby demonstrating your Good Faith Effort of having notified Texas certified HUBs and trade organizations or development centers about the subcontracting opportunity you listed in SECTION B-1. Your notice should include the scope of work, information regarding the location to review plans and specifications, bonding and insurance requirements, required qualifications, and identify a contact person. When sending notice of your subcontracting opportunity, you are encouraged to use the attached HUB Subcontracting Opportunity Notice form, which is also available online at https://www.comptroller.texas.gov/purchasing/docs/hub-forms/HUBSubcontractingOpportunityNotificationForm.pdf.

Retain supporting documentation (i.e., certified letter, fax, e-mail) demonstrating evidence of your good faith effort to notify the Texas certified HUBs and trade organizations or development centers. Also, be mindful that a working day is considered a normal business day of a state agency, not including weekends, federal or state holidays, or days the agency is declared closed by its executive officer. The initial day the subcontracting opportunity notice is sent/provided to the HUBs and to the trade organizations or development centers is considered to be "day zero" and does not count as one of the seven (7) working days.

a. Provide written notification of the subcontracting opportunity you listed in SECTION B-1, to three (3) or more Texas certified HUBs. Unless the contracting agency specified a different time period, you must allow the HUBs at least seven (7) working days to respond to the notice prior to you submitting your bid response to the contracting agency. When searching for Texas certified HUBs and verifying their HUB status, ensure that you use the State of Texas' Centralized Master Bidders List (CMBL) - Historically Underutilized Business (HUB) Directory Search located at http://mycpa.cpa.state.tx.us/tpasscmblsearch/index.jsp. HUB status code "**A**" signifies that the company is a Texas certified HUB.

b. List the **three (3) Texas certified HUBs** you notified regarding the subcontracting opportunity you listed in SECTION B-1. Include the company's Texas Vendor Identification (VID) Number, the date you sent notice to that company, and indicate whether it was responsive or non-responsive to your subcontracting opportunity notice.

Company Name	Texas VID (Do not enter Social Security Numbers.)	Date Notice Sent (mm/dd/yyyy)	Did the HUB Respond?
ADK Architects LLC	1475681877000	11/07/2019	☐ - Yes - No
Architecture & Quality Assurance Studio	1814803826000	11/07/2019	☐ - Yes - No
McKinney York Architects	1742769144300	11/07/2019	☑ - Yes - No

c. Provide written notification of the subcontracting opportunity you listed in SECTION B-1 to two (2) or more trade organizations or development centers in Texas to assist in identifying potential HUBs by disseminating the subcontracting opportunity to their members/participants. Unless the contracting agency specified a different time period, you must provide your subcontracting opportunity notice to trade organizations or development centers at least seven (7) working days prior to submitting your bid response to the contracting agency. A list of trade organizations and development centers that have expressed an interest in receiving notices of subcontracting opportunities is available on the Statewide HUB Program's webpage at https://www.comptroller.texas.gov/purchasing/vendor/hub/resources.php.

d. List **two (2) trade organizations or development centers** you notified regarding the subcontracting opportunity you listed in SECTION B-1. Include the date when you sent notice to it and indicate if it accepted or rejected your notice.

Trade Organizations or Development Centers	Date Notice Sent (mm/dd/yyyy)	Was the Notice Accepted?
TBCC	11/07/2019	- Yes - No
WBEA-Texas	11/07/2019	- Yes - No

DocuSign Envelope ID: 4D7A9C98-4F30-4D1D-907E-9A92F807637B

HSP Good Faith Effort - Method B (Attachment B) Cont.

Rev. 2/17

Enter your company's name here: _____ Requisition #: _____

SECTION B-4: SUBCONTRACTOR SELECTION

Enter the item number and description of the subcontracting opportunity you listed in **SECTION 2, Item b,** of the completed HSP form for which you are completing the attachment.

a. Enter the item number and description of the subcontracting opportunity for which you are completing this Attachment B continuation page.

Item Number: 1 **Description:** Architecture

b. List the subcontractor(s) you selected to perform the subcontracting opportunity you listed in **SECTION B-1.** Also identify whether they are a Texas certified HUB and their Texas Vendor Identification (VID) Number or federal Employer Identification Number (EIN), the approximate dollar value of the work to be subcontracted, and the expected percentage of work to be subcontracted. When searching for Texas certified HUBs and verifying their HUB status, ensure that you use the State of Texas' Centralized Master Bidders List (CMBL) - Historically Underutilized Business (HUB) Directory Search located at http://mycpa.cpa.state.tx.us/tpasscmblsearch/index.jsp. HUB status code "A" signifies that the company is a Texas certified HUB.

Company Name	Texas certified HUB	Texas VID or federal EIN Do not enter Social Security Numbers. If you do not know their VID / EIN, leave their VID / EIN field blank.	Approximate Dollar Amount	Expected Percentage of Contract
McKinney York Architects	☑ - Yes - No	1742769144300	$ TBD	2 %
	- Yes - No		$	%
	- Yes - No		$	%
	- Yes - No		$	%
	☐ - Yes - No		$	%
	☐ - Yes - No		$	%
	☐ - Yes - No		$	%
	☐ - Yes - No		$	%
	☐ - Yes - No		$	%
	☐ - Yes - No		$	%

c. If any of the subcontractors you have selected to perform the subcontracting opportunity you listed in **SECTION B-1** is not a Texas certified HUB, provide written justification for your selection process (attach additional page if necessary):

REMINDER: As specified in SECTION 4 of the completed HSP form, if you (respondent) are awarded any portion of the requisition, you are required to provide notice as soon as practical to **all** the subcontractors (HUBs and Non-HUBs) of their selection as a subcontractor. The notice must specify at a minimum the contracting agency's name and its point of contact for the contract, the contract award number, the subcontracting opportunity it (the subcontractor) will perform, the approximate dollar value of the subcontracting opportunity and the expected percentage of the total contract that the subcontracting opportunity represents. A copy of the notice required by this section must also be provided to the contracting agency's point of contact for the contract no later than ten (10) working days after the contract is awarded.

DocuSign Envelope ID: 4D7A9C98-4F30-4D1D-907E-9A92F807637B

HSP Good Faith Effort - Method B (Attachment B)

Rev. 2/17

Enter your company's name here: Tom Green and Company Engineers, Inc. Requisition #: 303-8-00680

IMPORTANT: If you responded "*No*" to **SECTION 2, Items c** and **d** of the completed HSP form, you must submit a completed "HSP Good Faith Effort - Method B (Attachment B)" for **each** of the subcontracting opportunities you listed in **SECTION 2, Item b** of the completed HSP form. You may photo-copy this page or download the form at https://www.comptroller.texas.gov/purchasing/docs/hub-forms/hub-sbcont-plan-gfe-achm-b.pdf..

SECTION B-1: SUBCONTRACTING OPPORTUNITY

Enter the item number and description of the subcontracting opportunity you listed in SECTION 2, Item b, of the completed HSP form for which you are completing the attachment.

Item Number: 2 **Description:** Building Envelope

SECTION B-2: MENTOR PROTÉGÉ PROGRAM

If respondent is participating as a Mentor in a State of Texas Mentor Protégé Program, submitting its Protégé (Protégé must be a State of Texas certified HUB) as a subcontractor to perform the subcontracting opportunity listed in **SECTION B-1**, constitutes a good faith effort to subcontract with a Texas certified HUB towards that specific portion of work.

Check the appropriate box (Yes or No) that indicates whether you will be subcontracting the portion of work you listed in SECTION B-1 to your Protégé.

☐ - **Yes** (If *Yes*, continue to SECTION B-4.)

☑ - **No / Not Applicable** (If *No* or *Not Applicable*, continue to SECTION B-3 and SECTION B-4.)

SECTION B-3: NOTIFICATION OF SUBCONTRACTING OPPORTUNITY

When completing this section you MUST comply with items **a, b, c** and **d**, thereby demonstrating your Good Faith Effort of having notified Texas certified HUBs and trade organizations or development centers about the subcontracting opportunity you listed in SECTION B-1. Your notice should include the scope of work, information regarding the location to review plans and specifications, bonding and insurance requirements, required qualifications, and identify a contact person. When sending notice of your subcontracting opportunity, you are encouraged to use the attached HUB Subcontracting Opportunity Notice form, which is also available online at https://www.comptroller.texas.gov/purchasing/docs/hub-forms/HUBSubcontractingOpportunityNotificationForm.pdf.

Retain supporting documentation (i.e., certified letter, fax, e-mail) demonstrating evidence of your good faith effort to notify the Texas certified HUBs and trade organizations or development centers. Also, be mindful that a working day is considered a normal business day of a state agency, not including weekends, federal or state holidays, or days the agency is declared closed by its executive officer. The initial day the subcontracting opportunity notice is sent/provided to the HUBs and to the trade organizations or development centers is considered to be "day zero" and does not count as one of the seven (7) working days.

a. Provide written notification of the subcontracting opportunity you listed in SECTION B-1, to three (3) or more Texas certified HUBs. Unless the contracting agency specified a different time period, you must allow the HUBs at least seven (7) working days to respond to the notice prior to you submitting your bid response to the contracting agency. When searching for Texas certified HUBs and verifying their HUB status, ensure that you use the State of Texas' Centralized Master Bidders List (CMBL) - Historically Underutilized Business (HUB) Directory Search located at http://mycpa.cpa.state.tx.us/tpasscmblsearch/index.jsp. HUB status code "**A**" signifies that the company is a Texas certified HUB.

b. List the **three (3) Texas certified HUBs** you notified regarding the subcontracting opportunity you listed in SECTION B-1. Include the company's Texas Vendor Identification (VID) Number, the date you sent notice to that company, and indicate whether it was responsive or non-responsive to your subcontracting opportunity notice.

Company Name	Texas VID (Do not enter Social Security Numbers.)	Date Notice Sent (mm/dd/yyyy)	Did the HUB Respond?
AP Engineering Consultant, Inc.	1262035983100	11/07/2019	☐ - Yes ☑ - No
ACON Engineering Consultant, LLC	1821821877600	11/07/2019	☐ - Yes ☑ - No
Aftermath Structural Repair, LLC	1475381421000	11/07/2019	☐ - Yes ☑ - No

c. Provide written notification of the subcontracting opportunity you listed in SECTION B-1 to two (2) or more trade organizations or development centers in Texas to assist in identifying potential HUBs by disseminating the subcontracting opportunity to their members/participants. Unless the contracting agency specified a different time period, you must provide your subcontracting opportunity notice to trade organizations or development centers at least seven (7) working days prior to submitting your bid response to the contracting agency. A list of trade organizations and development centers that have expressed an interest in receiving notices of subcontracting opportunities is available on the Statewide HUB Program's webpage at https://www.comptroller.texas.gov/purchasing/vendor/hub/resources.php.

d. List **two (2) trade organizations or development centers** you notified regarding the subcontracting opportunity you listed in SECTION B-1. Include the date when you sent notice to it and indicate if it accepted or rejected your notice.

Trade Organizations or Development Centers	Date Notice Sent (mm/dd/yyyy)	Was the Notice Accepted?
TBCC	02/13/2018	☑ - Yes ☐ - No
WBEA-Texas	02/13/2018	☑ - Yes ☐ - No

DocuSign Envelope ID: 4D7A9C98-4F30-4D1D-907E-9A92F807637B

HSP Good Faith Effort - Method B (Attachment B) Cont.

Rev. 2/17

Enter your company's name here: Tom Green and Company Engineers, Inc. Requisition #: 303-8-00680

SECTION B-4: SUBCONTRACTOR SELECTION

Enter the item number and description of the subcontracting opportunity you listed in **SECTION 2, Item b,** of the completed HSP form for which you are completing the attachment.

a. Enter the item number and description of the subcontracting opportunity for which you are completing this Attachment B continuation page.

Item Number: 2 **Description:** Building Envelope

b. List the subcontractor(s) you selected to perform the subcontracting opportunity you listed in **SECTION B-1**. Also identify whether they are a Texas certified HUB and their Texas Vendor Identification (VID) Number or federal Employer Identification Number (EIN), the approximate dollar value of the work to be subcontracted, and the expected percentage of work to be subcontracted. When searching for Texas certified HUBs and verifying their HUB status, ensure that you use the State of Texas' Centralized Master Bidders List (CMBL) - Historically Underutilized Business (HUB) Directory Search located at http://mycpa.cpa.state.tx.us/tpasscmblsearch/index.jsp. HUB status code "A" signifies that the company is a Texas certified HUB.

Company Name	Texas certified HUB	Texas VID or federal EIN Do not enter Social Security Numbers. If you do not know their VID / EIN, leave their VID / EIN field blank.	Approximate Dollar Amount	Expected Percentage of Contract
WJE	☐ - Yes ☑ - No	non-HUB	$ TBD	2 %
	☐ - Yes ☐ - No		$	%
	☐ - Yes ☐ - No		$	%
	☐ - Yes ☐ - No		$	%
	☐ - Yes ☐ - No		$	%
	☐ - Yes ☐ - No		$	%
	☐ - Yes ☐ - No		$	%
	☐ - Yes ☐ - No		$	%
	☐ - Yes ☐ - No		$	%
	☐ - Yes ☐ - No		$	%

c. If any of the subcontractors you have selected to perform the subcontracting opportunity you listed in **SECTION B-1** is **not** a Texas certified HUB, provide written justification for your selection process (attach additional page if necessary):

WJE has significant previous experience with TFC building envelope design, including previous experience in the some of the buildings that are a part of the RFQ.

REMINDER: As specified in SECTION 4 of the completed HSP form, if you (respondent) are awarded any portion of the requisition, you are required to provide notice as soon as practical to **all** the subcontractors (HUBs and Non-HUBs) of their selection as a subcontractor. The notice must specify at a minimum the contracting agency's name and its point of contact for the contract, the contract award number, the subcontracting opportunity it (the subcontractor) will perform, the approximate dollar value of the subcontracting opportunity and the expected percentage of the total contract that the subcontracting opportunity represents. A copy of the notice required by this section must also be provided to the contracting agency's point of contact for the contract no later than ten (10) working days after the contract is awarded.

DocuSign Envelope ID: 4D7A9C98-4F30-4D1D-907E-9A92F807637B

HSP Good Faith Effort - Method B (Attachment B)

Rev. 2/17

Enter your company's name here: Tom Green and Company Engineers, Inc. Requisition #: 303-8-00680

IMPORTANT: If you responded "*No*" to **SECTION 2, Items c** and **d** of the completed HSP form, you must submit a completed "HSP Good Faith Effort - Method B (Attachment B)" for **each** of the subcontracting opportunities you listed in **SECTION 2, Item b** of the completed HSP form. You may photo-copy this page or download the form at https://www.comptroller.texas.gov/purchasing/docs/hub-forms/hub-sbcont-plan-gfe-achm-b.pdf..

SECTION B-1: SUBCONTRACTING OPPORTUNITY

Enter the item number and description of the subcontracting opportunity you listed in SECTION 2, Item b, of the completed HSP form for which you are completing the attachment.

Item Number: 3 **Description:** Structural Engineering

SECTION B-2: MENTOR PROTÉGÉ PROGRAM

If respondent is participating as a Mentor in a State of Texas Mentor Protégé Program, submitting its Protégé (Protégé must be a State of Texas certified HUB) as a subcontractor to perform the subcontracting opportunity listed in **SECTION B-1**, constitutes a good faith effort to subcontract with a Texas certified HUB towards that specific portion of work.

Check the appropriate box (Yes or No) that indicates whether you will be subcontracting the portion of work you listed in SECTION B-1 to your Protégé.

☐ - **Yes** (If *Yes*, continue to SECTION B-4.)

☑ - **No / Not Applicable** (If *No* or *Not Applicable*, continue to SECTION B-3 and SECTION B-4.)

SECTION B-3: NOTIFICATION OF SUBCONTRACTING OPPORTUNITY

When completing this section you MUST comply with items **a, b, c** and **d**, thereby demonstrating your Good Faith Effort of having notified Texas certified HUBs and trade organizations or development centers about the subcontracting opportunity you listed in SECTION B-1. Your notice should include the scope of work, information regarding the location to review plans and specifications, bonding and insurance requirements, required qualifications, and identify a contact person. When sending notice of your subcontracting opportunity, you are encouraged to use the attached HUB Subcontracting Opportunity Notice form, which is also available online at https://www.comptroller.texas.gov/purchasing/docs/hub-forms/HUBSubcontractingOpportunityNotificationForm.pdf.

Retain supporting documentation (i.e., certified letter, fax, e-mail) demonstrating evidence of your good faith effort to notify the Texas certified HUBs and trade organizations or development centers. Also, be mindful that a working day is considered a normal business day of a state agency, not including weekends, federal or state holidays, or days the agency is declared closed by its executive officer. The initial day the subcontracting opportunity notice is sent/provided to the HUBs and to the trade organizations or development centers is considered to be "day zero" and does not count as one of the seven (7) working days.

a. Provide written notification of the subcontracting opportunity you listed in SECTION B-1, to three (3) or more Texas certified HUBs. Unless the contracting agency specified a different time period, you must allow the HUBs at least seven (7) working days to respond to the notice prior to you submitting your bid response to the contracting agency. When searching for Texas certified HUBs and verifying their HUB status, ensure that you use the State of Texas' Centralized Master Bidders List (CMBL) - Historically Underutilized Business (HUB) Directory Search located at http://mycpa.cpa.state.tx.us/tpasscmblsearch/index.jsp. HUB status code "**A**" signifies that the company is a Texas certified HUB.

b. List the **three (3) Texas certified HUBs** you notified regarding the subcontracting opportunity you listed in SECTION B-1. Include the company's Texas Vendor Identification (VID) Number, the date you sent notice to that company, and indicate whether it was responsive or non-responsive to your subcontracting opportunity notice.

Company Name	Texas VID (Do not enter Social Security Numbers.)	Date Notice Sent (mm/dd/yyyy)	Did the HUB Respond?
AG&E Associates, PLLC	1200819808200	11/07/2019	☐ - Yes ☑ - No
AR Structural, PLLC	1472632597100	11/07/2019	☐ - Yes ☑ - No
StructuresPE, LLP	1742982899300	11/07/2019	☑ - Yes ☐ - No

c. Provide written notification of the subcontracting opportunity you listed in SECTION B-1 to two (2) or more trade organizations or development centers in Texas to assist in identifying potential HUBs by disseminating the subcontracting opportunity to their members/participants. Unless the contracting agency specified a different time period, you must provide your subcontracting opportunity notice to trade organizations or development centers at least seven (7) working days prior to submitting your bid response to the contracting agency. A list of trade organizations and development centers that have expressed an interest in receiving notices of subcontracting opportunities is available on the Statewide HUB Program's webpage at https://www.comptroller.texas.gov/purchasing/vendor/hub/resources.php.

d. List **two (2) trade organizations or development centers** you notified regarding the subcontracting opportunity you listed in SECTION B-1. Include the date when you sent notice to it and indicate if it accepted or rejected your notice.

Trade Organizations or Development Centers	Date Notice Sent (mm/dd/yyyy)	Was the Notice Accepted?
TBCC	02/13/2018	☑ - Yes ☐ - No
WBEA-Texas	02/13/2018	☑ - Yes ☐ - No

DocuSign Envelope ID: 4D7A9C98-4F30-4D1D-907E-9A92F807637B

HSP Good Faith Effort - Method B (Attachment B) Cont.

Rev. 2/17

Enter your company's name here: Tom Green and Company Engineers, Inc. Requisition #: 303-8-00680

SECTION B-4: SUBCONTRACTOR SELECTION

Enter the item number and description of the subcontracting opportunity you listed in **SECTION 2, Item b,** of the completed HSP form for which you are completing the attachment.

a. Enter the item number and description of the subcontracting opportunity for which you are completing this Attachment B continuation page.

Item Number: 3 **Description:** Structural Engineering

b. List the subcontractor(s) you selected to perform the subcontracting opportunity you listed in **SECTION B-1**. Also identify whether they are a Texas certified HUB and their Texas Vendor Identification (VID) Number or federal Employer Identification Number (EIN), the approximate dollar value of the work to be subcontracted, and the expected percentage of work to be subcontracted. When searching for Texas certified HUBs and verifying their HUB status, ensure that you use the State of Texas' Centralized Master Bidders List (CMBL) - Historically Underutilized Business (HUB) Directory Search located at http://mycpa.cpa.state.tx.us/tpasscmblsearch/index.jsp. HUB status code "A" signifies that the company is a Texas certified HUB.

Company Name	Texas certified HUB	Texas VID or federal EIN Do not enter Social Security Numbers. If you do not know their VID / EIN, leave their VID / EIN field blank.	Approximate Dollar Amount	Expected Percentage of Contract
StructuresPE, LLP	☑ - Yes ☐ - No	1742982899300	$ TBD	2 %
	☐ - Yes ☐ - No		$	%
	☐ - Yes ☐ - No		$	%
	☐ - Yes ☐ - No		$	%
	☐ - Yes ☐ - No		$	%
	☐ - Yes ☐ - No		$	%
	☐ - Yes ☐ - No		$	%
	☐ - Yes ☐ - No		$	%
	☐ - Yes ☐ - No		$	%
	☐ - Yes ☐ - No		$	%

c. If any of the subcontractors you have selected to perform the subcontracting opportunity you listed in **SECTION B-1** is not a Texas certified HUB, provide written justification for your selection process (attach additional page if necessary):

REMINDER: As specified in SECTION 4 of the completed HSP form, if you (respondent) are awarded any portion of the requisition, you are required to provide notice as soon as practical to **all** the subcontractors (HUBs and Non-HUBs) of their selection as a subcontractor. The notice must specify at a minimum the contracting agency's name and its point of contact for the contract, the contract award number, the subcontracting opportunity it (the subcontractor) will perform, the approximate dollar value of the subcontracting opportunity and the expected percentage of the total contract that the subcontracting opportunity represents. A copy of the notice required by this section must also be provided to the contracting agency's point of contact for the contract no later than ten (10) working days after the contract is awarded.

DocuSign Envelope ID: 4D7A9C98-4F30-4D1D-907E-9A92F807637B

EXHIBIT I

HUB SUBCONTRACTING PLAN [FORM]

DocuSign Envelope ID: 4D7A9C98-4F30-4D1D-907E-9A92F807637B

Rev. 2/17

HUB Subcontracting Plan (HSP)

QUICK CHECKLIST

While this HSP Quick Checklist is being provided to merely assist you in readily identifying the sections of the HSP form that you will need to complete, it is very important that you adhere to the instructions in the HSP form and instructions provided by the contracting agency.

➤ **If you will be awarding all of the subcontracting work you have to offer under the contract to only Texas certified HUB vendors, complete:**

- ☐ Section 1 - Respondent and Requisition Information
- ☐ Section 2 a. - Yes, I will be subcontracting portions of the contract.
- ☐ Section 2 b. - List all the portions of work you will subcontract, and indicate the percentage of the contract you expect to award to Texas certified HUB vendors.
- ☐ Section 2 c. - Yes
- ☐ Section 4 - Affirmation
- ☐ GFE Method A (Attachment A) - Complete an Attachment A for each of the subcontracting opportunities you listed in Section 2 b.

➤ **If you will be subcontracting any portion of the contract to Texas certified HUB vendors and Non-HUB vendors, and the aggregate percentage of all the subcontracting work you will be awarding to the Texas certified HUB vendors with which you do not have a *continuous contract** in place for more than five (5) years *meets or exceeds* the HUB Goal the contracting agency identified in the "Agency Special Instructions/Additional Requirements", complete:**

- ☐ Section 1 - Respondent and Requisition Information
- ☐ Section 2 a. - Yes, I will be subcontracting portions of the contract.
- ☐ Section 2 b. - List all the portions of work you will subcontract, and indicate the percentage of the contract you expect to award to Texas certified HUB vendors and Non-HUB vendors.
- ☐ Section 2 c. - No
- ☐ Section 2 d. - Yes
- ☐ Section 4 - Affirmation
- ☐ GFE Method A (Attachment A) - Complete an Attachment A for each of the subcontracting opportunities you listed in Section 2 b.

➤ **If you will be subcontracting any portion of the contract to Texas certified HUB vendors and Non-HUB vendors or only to Non-HUB vendors, and the aggregate percentage of all the subcontracting work you will be awarding to the Texas certified HUB vendors with which you do not have a *continuous contract** in place for more than five (5) years *does not meet or exceed* the HUB Goal the contracting agency identified in the "Agency Special Instructions/Additional Requirements", complete:**

- ☐ Section 1 - Respondent and Requisition Information
- ☐ Section 2 a. - Yes, I will be subcontracting portions of the contract.
- ☐ Section 2 b. - List all the portions of work you will subcontract, and indicate the percentage of the contract you expect to award to Texas certified HUB vendors and Non-HUB vendors.
- ☐ Section 2 c. - No
- ☐ Section 2 d. - No
- ☐ Section 4 - Affirmation
- ☐ GFE Method B (Attachment B) - Complete an Attachment B for each of the subcontracting opportunities you listed in Section 2 b.

➤ **If you will not be subcontracting any portion of the contract and will be fulfilling the entire contract with your own resources (i.e., employees, supplies, materials and/or equipment), complete:**

- ☐ Section 1 - Respondent and Requisition Information
- ☐ Section 2 a. - No, I will not be subcontracting any portion of the contract, and I will be fulfilling the entire contract with my own resources.
- ☐ Section 3 - Self Performing Justification
- ☐ Section 4 - Affirmation

***Continuous Contract:** Any existing written agreement (including any renewals that are exercised) between a prime contractor and a HUB vendor, where the HUB vendor provides the prime contractor with goods or service, to include under the same contract for a specified period of time. The frequency the HUB vendor is utilized or paid during the term of the contract is not relevant to whether the contract is considered continuous. Two or more contracts that run concurrently or overlap one another for different periods of time are considered by CPA to be individual contracts rather than renewals or extensions to the original contract. In such situations the prime contractor and HUB vendor are entering (have entered) into "new" contracts.*

DocuSign Envelope ID: 4D7A9C98-4F30-4D1D-907E-9A92F807637B

Rev. 2/17

HUB Subcontracting Plan (HSP)

In accordance with Texas Gov't Code §2161.252, the contracting agency has determined that subcontracting opportunities are probable under this contract. Therefore, all respondents, including State of Texas certified Historically Underutilized Businesses (HUBs) must complete and submit this State of Texas HUB Subcontracting Plan (HSP) with their response to the bid requisition (solicitation).

NOTE: Responses that do not include a completed HSP shall be rejected pursuant to Texas Gov't Code §2161.252(b).

The HUB Program promotes equal business opportunities for economically disadvantaged persons to contract with the State of Texas in accordance with the goals specified in the 2009 State of Texas Disparity Study. The statewide HUB goals defined in 34 Texas Administrative Code (TAC) §20.284 are:

- ***11.2 percent for heavy construction other than building contracts,***
- ***21.1 percent for all building construction, including general contractors and operative builders' contracts,***
- ***32.9 percent for all special trade construction contracts,***
- ***23.7 percent for professional services contracts,***
- ***26.0 percent for all other services contracts, and***
- ***21.1 percent for commodities contracts.***

- - Agency Special Instructions/Additional Requirements - -

*In accordance with 34 TAC §20.285(d)(1)(D)(iii), a respondent (prime contractor) may demonstrate good faith effort to utilize Texas certified HUBs for its subcontracting opportunities if the total value of the respondent's subcontracts with Texas certified HUBs meets or exceeds the statewide HUB goal or the agency specific HUB goal, whichever is higher. When a respondent uses this method to demonstrate good faith effort, the respondent must identify the HUBs with which it will subcontract. If using existing contracts with Texas certified HUBs to satisfy this requirement, only the aggregate percentage of the contracts expected to be subcontracted to HUBs with which the respondent **does not** have a **continuous contract*** in place for **more than five (5) years** shall qualify for meeting the HUB goal. This limitation is designed to encourage vendor rotation as recommended by the 2009 Texas Disparity Study.*

SECTION 1: RESPONDENT AND REQUISITION INFORMATION

a. Respondent (Company) Name: _____ State of Texas VID #: _____

Point of Contact: _____ Phone #: _____

E-mail Address: _____ Fax #: _____

b. Is your company a State of Texas certified HUB? ☐ - Yes ☐ - No

c. Requisition #: _____ Bid Open Date: _____ (mm/dd/yyyy)

DocuSign Envelope ID: 4D7A9C98-4F30-4D1D-907E-9A92F807637B

Enter your company's name here: _____ Requisition #: _____

SECTION 2: RESPONDENT's SUBCONTRACTING INTENTIONS

After dividing the contract work into reasonable lots or portions to the extent consistent with prudent industry practices, and taking into consideration the scope of work to be performed under the proposed contract, including all potential subcontracting opportunities, the respondent must determine what portions of work, **including contracted staffing, goods and services will be subcontracted.** Note: In accordance with 34 TAC §20.282, a "Subcontractor" means a person who contracts with a prime contractor to work, to supply commodities, or to contribute toward completing work for a governmental entity.

a. Check the appropriate box (Yes or No) that identifies your subcontracting intentions:

☐ - ***Yes***, I will be subcontracting portions of the contract. (If ***Yes***, complete Item b of this SECTION and continue to Item c of this SECTION.)

☐ - ***No***, I will not be subcontracting any portion of the contract, and I will be fulfilling the entire contract with my own resources, including employees, goods and services. (If ***No***, continue to SECTION 3 and SECTION 4.)

b. List all the portions of work (subcontracting opportunities) you will subcontract. Also, based on the total value of the contract, identify the percentages of the contract you expect to award to Texas certified HUBs, and the percentage of the contract you expect to award to vendors that are not a Texas certified HUB (i.e., Non-HUB).

Item #	Subcontracting Opportunity Description	HUBs		Non-HUBs
		Percentage of the contract expected to be subcontracted to HUBs with which you do not have a continuous contract* in place for more than five (5) years.	Percentage of the contract expected to be subcontracted to HUBs with which you have a continuous contract* in place for more than five (5) years.	Percentage of the contract expected to be subcontracted to non-HUBs.
1		%	%	%
2		%	%	%
3		%	%	%
4		%	%	%
5		%	%	%
6		%	%	%
7		%	%	%
8		%	%	%
9		%	%	%
10		%	%	%
11		%	%	%
12		%	%	%
13		%	%	%
14		%	%	%
15		%	%	%
	Aggregate percentages of the contract expected to be subcontracted:	%	%	%

(Note: If you have more than fifteen subcontracting opportunities, a continuation sheet is available online at https://www.comptroller.texas.gov/purchasing/vendor/hub/forms.php).

c. Check the appropriate box (Yes or No) that indicates whether you will be using **only** Texas certified HUBs to perform **all** of the subcontracting opportunities you listed in SECTION 2, Item b.

☐ - ***Yes*** (If ***Yes***, continue to SECTION 4 and complete an "HSP Good Faith Effort - Method A (Attachment A)" for **each** of the subcontracting opportunities you listed.)

☐ - ***No*** (If ***No***, continue to Item d, of this SECTION.)

d. Check the appropriate box (Yes or No) that indicates whether the aggregate expected percentage of the contract you will subcontract **with Texas certified HUBs** with which you **do not** have a **continuous contract*** in place with for **more than five (5) years**, **meets or exceeds** the HUB goal the contracting agency identified on page 1 in the "**Agency Special Instructions/Additional Requirements.**"

☐ - ***Yes*** (If ***Yes***, continue to SECTION 4 and complete an "HSP Good Faith Effort - Method A (Attachment A)" for **each** of the subcontracting opportunities you listed.)

☐ - ***No*** (If ***No***, continue to SECTION 4 and complete an "HSP Good Faith Effort - Method B (Attachment B)" for **each** of the subcontracting opportunities you listed.)

***Continuous Contract**: Any existing written agreement (including any renewals that are exercised) between a prime contractor and a HUB vendor, where the HUB vendor provides the prime contractor with goods or service under the same contract for a specified period of time. The frequency the HUB vendor is utilized or paid during the term of the contract is not relevant to whether the contract is considered continuous. Two or more contracts that run concurrently or overlap one another for different periods of time are considered by CPA to be individual contracts rather than renewals or extensions to the original contract. In such situations the prime contractor and HUB vendor are entering (have entered) into "new" contracts.*

DocuSign Envelope ID: 4D7A9C98-4F30-4D1D-907E-9A92F807637B

Enter your company's name here: _____ Requisition #: _____

SECTION 2: RESPONDENT's SUBCONTRACTING INTENTIONS (CONTINUATION SHEET)

This page can be used as a continuation sheet to the HSP Form's page 2, Section 2, Item b. Continue listing the portions of work (subcontracting opportunities) you will subcontract. Also, based on the total value of the contract, identify the percentages of the contract you expect to award to Texas certified HUBs, and the percentage of the contract you expect to award to vendors that are not a Texas certified HUB (i.e., Non-HUB).

Item #	Subcontracting Opportunity Description	HUBs		Non-HUBs
		Percentage of the contract expected to be subcontracted to HUBs with which you do not have a continuous contract* in place for more than five (5) years.	Percentage of the contract expected to be subcontracted to HUBs with which you have a continuous contract* in place for more than five (5) years.	Percentage of the contract expected to be subcontracted to non-HUBs.
16		%	%	%
17		%	%	%
18		%	%	%
19		%	%	%
20		%	%	%
21		%	%	%
22		%	%	%
23		%	%	%
24		%	%	%
25		%	%	%
26		%	%	%
27		%	%	%
28		%	%	%
29		%	%	%
30		%	%	%
31		%	%	%
32		%	%	%
33		%	%	%
34		%	%	%
35		%	%	%
36		%	%	%
37		%	%	%
38		%	%	%
39		%	%	%
40		%	%	%
41		%	%	%
42		%	%	%
43		%	%	%
	Aggregate percentages of the contract expected to be subcontracted:	%	%	%

**Continuous Contract: Any existing written agreement (including any renewals that are exercised) between a prime contractor and a HUB vendor, where the HUB vendor provides the prime contractor with goods or service under the same contract for a specified period of time. The frequency the HUB vendor is utilized or paid during the term of the contract is not relevant to whether the contract is considered continuous. Two or more contracts that run concurrently or overlap one another for different periods of time are considered by CPA to be individual contracts rather than renewals or extensions to the original contract. In such situations the prime contractor and HUB vendor are entering (have entered) into "new" contracts.*

DocuSign Envelope ID: 4D7A9C98-4F30-4D1D-907E-9A92F807637B

Enter your company's name here: _____ Requisition #: _____

SECTION 3: SELF PERFORMING JUSTIFICATION (If you responded "No" to SECTION 2, Item a, you must complete this SECTION and continue to SECTION 4.) If you responded "No" to SECTION 2, Item a, in the space provided below **explain how** your company will perform the entire contract with its own employees, supplies, materials and/or equipment.

SECTION 4: AFFIRMATION

As evidenced by my signature below, I affirm that I am an authorized representative of the respondent listed in SECTION 1, and that the information and supporting documentation submitted with the HSP is true and correct. Respondent understands and agrees that, if awarded any portion of the requisition:

- The respondent will provide notice as soon as practical to all the subcontractors (HUBs and Non-HUBs) of their selection as a subcontractor for the awarded contract. The notice must specify at a minimum the contracting agency's name and its point of contact for the contract, the contract award number, the subcontracting opportunity they (the subcontractor) will perform, the approximate dollar value of the subcontracting opportunity and the expected percentage of the total contract that the subcontracting opportunity represents. A copy of the notice required by this section must also be provided to the contracting agency's point of contact for the contract no later than ten (10) working days after the contract is awarded.
- The respondent must submit monthly compliance reports (Prime Contractor Progress Assessment Report – PAR) to the contracting agency, verifying its *compliance with the* HSP, including the use of and expenditures made to its subcontractors (HUBs and Non-HUBs). (The PAR is available at https://www.comptroller.texas.gov/purchasing/docs/hub-forms/ProgressAssessmentReportForm.xls).
- The respondent must seek approval from the contracting agency prior to making any modifications to its HSP, including the hiring of additional or different subcontractors and the termination of a subcontractor the respondent identified in its HSP. If the HSP is modified without the contracting agency's prior approval, respondent may be subject to any and all enforcement remedies available under the contract or otherwise available by law, up to and including debarment from all state contracting.
- The respondent must, upon request, allow the contracting agency to perform on-site reviews of the company's headquarters and/or work-site where services are being performed and must provide documentation regarding staffing and other resources.

Signature	Printed Name	Title	Date (mm/dd/yyyy)

Reminder:

- If you responded "**Yes**" to **SECTION 2, Items c or d**, you must complete an "HSP Good Faith Effort - Method A (Attachment A)" for **each** of the subcontracting opportunities you listed in SECTION 2, Item b.
- If you responded "**No**" **SECTION 2, Items c and d**, you must complete an "HSP Good Faith Effort - Method B (Attachment B)" for **each** of the subcontracting opportunities you listed in SECTION 2, Item b.

DocuSign Envelope ID: 4D7A9C98-4F30-4D1D-907E-9A92F807637B

HSP Good Faith Effort - Method A (Attachment A)

Rev. 2/17

Enter your company's name here: _____ Requisition #: _____

IMPORTANT: If you responded "***Yes***" to **SECTION 2, Items c or d** of the completed HSP form, you must submit a completed "HSP Good Faith Effort - Method A (Attachment A)" for **each** of the subcontracting opportunities you listed in **SECTION 2, Item b** of the completed HSP form. You may photo-copy this page or download the form at https://www.comptroller.texas.gov/purchasing/docs/hub-forms/hub-sbcont-plan-gfe-achm-a.pdf

SECTION A-1: SUBCONTRACTING OPPORTUNITY

Enter the item number and description of the subcontracting opportunity you listed in SECTION 2, Item b, of the completed HSP form for which you are completing the attachment.

Item Number: _____ **Description:** _____

SECTION A-2: SUBCONTRACTOR SELECTION

List the subcontractor(s) you selected to perform the subcontracting opportunity you listed above in SECTION A-1. Also identify whether they are a Texas certified HUB and their Texas Vendor Identification (VID) Number or federal Employer Identification Number (EIN), the approximate dollar value of the work to be subcontracted, and the expected percentage of work to be subcontracted. When searching for Texas certified HUBs and verifying their HUB status, ensure that you use the State of Texas' Centralized Master Bidders List (CMBL) - Historically Underutilized Business (HUB) Directory Search located at http://mycpa.cpa.state.tx.us/tpasscmblsearch/index.jsp. HUB status code "**A**" signifies that the company is a Texas certified HUB.

Company Name	Texas certified HUB	Texas VID or federal EIN Do not enter Social Security Numbers. If you do not know their VID / EIN, leave their VID / EIN field blank.	Approximate Dollar Amount	Expected Percentage of Contract
	☐ - Yes ☐ - No		$	%
	☐ - Yes ☐ - No		$	%
	☐ - Yes ☐ - No		$	%
	☐ - Yes ☐ - No		$	%
	☐ - Yes ☐ - No		$	%
	☐ - Yes ☐ - No		$	%
	☐ - Yes ☐ - No		$	%
	☐ - Yes ☐ - No		$	%
	☐ - Yes ☐ - No		$	%
	☐ - Yes ☐ - No		$	%
	☐ - Yes ☐ - No		$	%
	☐ - Yes ☐ - No		$	%
	☐ - Yes ☐ - No		$	%
	☐ - Yes ☐ - No		$	%
	☐ - Yes ☐ - No		$	%
	☐ - Yes ☐ - No		$	%
	☐ - Yes ☐ - No		$	%
	☐ - Yes ☐ - No		$	%
	☐ - Yes ☐ - No		$	%
	☐ - Yes ☐ - No		$	%
	☐ - Yes ☐ - No		$	%
	☐ - Yes ☐ - No		$	%

REMINDER: As specified in SECTION 4 of the completed HSP form, if you (respondent) are awarded any portion of the requisition, you are required to provide notice as soon as practical to all the subcontractors (HUBs and Non-HUBs) of their selection as a subcontractor. The notice must specify at a minimum the contracting agency's name and its point of contact for the contract, the contract award number, the subcontracting opportunity they (the subcontractor) will perform, the approximate dollar value of the subcontracting opportunity and the expected percentage of the total contract that the subcontracting opportunity represents. A copy of the notice required by this section must also be provided to the contracting agency's point of contact for the contract no later than ten (10) working days after the contract is awarded.

DocuSign Envelope ID: 4D7A9C98-4F30-4D1D-907E-9A92F807637B

HSP Good Faith Effort - Method B (Attachment B)

Rev. 2/17

Enter your company's name here: _____ Requisition #: _____

IMPORTANT: If you responded "***No***" to **SECTION 2, Items c** and **d** of the completed HSP form, you must submit a completed "HSP Good Faith Effort - Method B (Attachment B)" for **each** of the subcontracting opportunities you listed in **SECTION 2, Item b** of the completed HSP form. You may photo-copy this page or download the form at https://www.comptroller.texas.gov/purchasing/docs/hub-forms/hub-sbcont-plan-gfe-achm-b.pdf..

SECTION B-1: SUBCONTRACTING OPPORTUNITY

Enter the item number and description of the subcontracting opportunity you listed in SECTION 2, Item b, of the completed HSP form for which you are completing the attachment.

Item Number: _____ **Description:** _____

SECTION B-2: MENTOR PROTÉGÉ PROGRAM

If respondent is participating as a Mentor in a State of Texas Mentor Protégé Program, submitting its Protégé (Protégé must be a State of Texas certified HUB) as a subcontractor to perform the subcontracting opportunity listed in **SECTION B-1**, constitutes a good faith effort to subcontract with a Texas certified HUB towards that specific portion of work.

Check the appropriate box (Yes or No) that indicates whether you will be subcontracting the portion of work you listed in SECTION B-1 to your Protégé.

☐ - **Yes** (If ***Yes***, continue to SECTION B-4.)

☐ - **No / Not Applicable** (If ***No*** or ***Not Applicable***, continue to SECTION B-3 and SECTION B-4.)

SECTION B-3: NOTIFICATION OF SUBCONTRACTING OPPORTUNITY

When completing this section you MUST comply with items **a, b, c** and **d**, thereby demonstrating your Good Faith Effort of having notified Texas certified HUBs and trade organizations or development centers about the subcontracting opportunity you listed in SECTION B-1. Your notice should include the scope of work, information regarding the location to review plans and specifications, bonding and insurance requirements, required qualifications, and identify a contact person. When *sending notice of your subcontracting opportunity, you are encouraged to use the attached HUB Subcontracting Opportunity Notice form*, which is also available online at https://www.comptroller.texas.gov/purchasing/docs/hub-forms/HUBSubcontractingOpportunityNotificationForm.pdf.

Retain supporting documentation (i.e., certified letter, fax, e-mail) demonstrating evidence of your good faith effort to notify the Texas certified HUBs and trade organizations or development centers. Also, be mindful that a working day is considered a normal business day of a state agency, not including weekends, federal or state holidays, or days the agency is declared closed by its executive officer. The initial day the subcontracting opportunity notice is sent/provided to the HUBs and to the trade organizations or development centers is considered to be "day zero" and does not count as one of the seven (7) working days.

a. Provide written notification of the subcontracting opportunity you listed in SECTION B-1, to three (3) or more Texas certified HUBs. Unless the contracting agency specified a different time period, you must allow the HUBs at least seven (7) working days to respond to the notice prior to you submitting your bid response to the contracting agency. When searching for Texas certified HUBs and verifying their HUB status, ensure that you use the State of Texas' Centralized Master Bidders List (CMBL) - Historically Underutilized Business (HUB) Directory Search located at http://mycpa.cpa.state.tx.us/tpasscmblsearch/index.jsp. HUB status code "**A**" signifies that the company is a Texas certified HUB.

b. List the **three (3) Texas certified HUBs** you notified regarding the subcontracting opportunity you listed in SECTION B-1. Include the company's Texas Vendor Identification (VID) Number, the date you sent notice to that company, and indicate whether it was responsive or non-responsive to your subcontracting opportunity notice.

Company Name	Texas VID (Do not enter Social Security Numbers.)	Date Notice Sent (mm/dd/yyyy)	Did the HUB Respond?
			☐ - Yes ☐ - No
			☐ - Yes ☐ - No
			☐ - Yes ☐ - No

c. Provide written notification of the subcontracting opportunity you listed in SECTION B-1 to two (2) or more trade organizations or development centers in Texas to assist in identifying potential HUBs by disseminating the subcontracting opportunity to their members/participants. Unless the contracting agency specified a different time period, you must provide your subcontracting opportunity notice to trade organizations or development centers at least seven (7) working days prior to submitting your bid response to the contracting agency. A list of trade organizations and *development centers that have expressed an interest in receiving notices* of subcontracting opportunities is available on the Statewide HUB Program's webpage at https://www.comptroller.texas.gov/purchasing/vendor/hub/resources.php.

d. List **two (2) trade organizations or development centers** you notified regarding the subcontracting opportunity you listed in SECTION B-1. Include the date when you sent notice to it and indicate if it accepted or rejected your notice.

Trade Organizations or Development Centers	Date Notice Sent (mm/dd/yyyy)	Was the Notice Accepted?
		☐ - Yes ☐ - No
		☐ - Yes ☐ - No

DocuSign Envelope ID: 4D7A9C98-4F30-4D1D-907E-9A92F807637B

HSP Good Faith Effort - Method B (Attachment B) Cont.

Rev. 2/17

Enter your company's name here: _____ Requisition #: _____

SECTION B-4: SUBCONTRACTOR SELECTION

Enter the item number and description of the subcontracting opportunity you listed in **SECTION 2, Item b,** of the completed HSP form for which you are completing the attachment.

a. Enter the item number and description of the subcontracting opportunity for which you are completing this Attachment B continuation page.

Item Number: _____ **Description:** _____

b. List the subcontractor(s) you selected to perform the subcontracting opportunity you listed in **SECTION B-1**. Also identify whether they are a Texas certified HUB and their Texas Vendor Identification (VID) Number or federal Emplioyer Identification Number (EIN), the approximate dollar value of the work to be subcontracted, and the expected percentage of work to be subcontracted. When searching for Texas certified HUBs and verifying their HUB status, ensure that you use the State of Texas' Centralized Master Bidders List (CMBL) - Historically Underutilized Business (HUB) Directory Search located at http://mycpa.cpa.state.tx.us/tpasscmblsearch/index.jsp. HUB status code "**A**" signifies that the company is a Texas certified HUB.

Company Name	Texas certified HUB	Texas VID or federal EIN Do not enter Social Security Numbers. If you do not know their VID / EIN, leave their VID / EIN field blank.	Approximate Dollar Amount	Expected Percentage of Contract
	☐ - Yes ☐ - No		$	%
	☐ - Yes ☐ - No		$	%
	☐ - Yes ☐ - No		$	%
	☐ - Yes ☐ - No		$	%
	☐ - Yes ☐ - No		$	%
	☐ - Yes ☐ - No		$	%
	☐ - Yes ☐ - No		$	%
	☐ - Yes ☐ - No		$	%
	☐ - Yes ☐ - No		$	%
	☐ - Yes ☐ - No		$	%

c. If any of the subcontractors you have selected to perform the subcontracting opportunity you listed in **SECTION B-1** is **not** a Texas certified HUB, provide written justification for your selection process (attach additional page if necessary):

REMINDER: As specified in SECTION 4 of the completed HSP form, if you (respondent) are awarded any portion of the requisition, you are required to provide notice as soon as practical to **all** the subcontractors (HUBs and Non-HUBs) of their selection as a subcontractor. The notice must specify at a minimum the contracting agency's name and its point of contact for the contract, the contract award number, the subcontracting opportunity it (the subcontractor) will perform, the approximate dollar value of the subcontracting opportunity and the expected percentage of the total contract that the subcontracting opportunity represents. A copy of the notice required by this section must also be provided to the contracting agency's point of contact for the contract no later than ten (10) working days after the contract is awarded.

DocuSign Envelope ID: 4D7A9C98-4F30-4D1D-907E-9A92F807637B

Rev. 2/17

HUB Subcontracting Opportunity Notification Form

In accordance with Texas Gov't Code, Chapter 2161, each state agency that considers entering into a contract with an expected value of $100,000 or more shall, before the agency solicits bids, proposals, offers, or other applicable expressions of interest, determine whether subcontracting opportunities are probable under the contract. The state agency I have identified below in **Section B** has determined that subcontracting opportunities are probable under the requisition to which my company will be responding.

34 Texas Administrative Code, §20.285 requires all respondents (prime contractors) bidding on the contract to provide notice of each of their subcontracting opportunities to at least three (3) Texas certified HUBs (who work within the respective industry applicable to the subcontracting opportunity), and allow the HUBs at least seven (7) working days to respond to the notice prior to the respondent submitting its bid response to the contracting agency. In addition, at least seven (7) working days prior to submitting its bid response to the contracting agency, the respondent must provide notice of each of its subcontracting opportunities to two (2) or more trade organizations or development centers (in Texas) that serves members of groups (i.e., Asian Pacific American, Black American, Hispanic American, Native American, Woman, Service Disabled Veteran) identified in Texas Administrative Code §20.282(19)(C).

We respectfully request that vendors interested in bidding on the subcontracting opportunity scope of work identified in **Section C, Item 2**, reply no later than the date and time identified in **Section C, Item 1**. Submit your response to the point-of-contact referenced in **Section A**.

SECTION A: PRIME CONTRACTOR'S INFORMATION

Company Name: _____ **State of Texas VID #:** _____

Point-of-Contact: _____ **Phone #:** _____

E-mail Address: _____ **Fax #:** _____

SECTION B: CONTRACTING STATE AGENCY AND REQUISITION INFORMATION

Agency Name: _____

Point-of-Contact: _____ **Phone #:** _____

Requisition #: _____ **Bid Open Date:** _____ (mm/dd/yyyy)

SECTION C: SUBCONTRACTING OPPORTUNITY RESPONSE DUE DATE, DESCRIPTION, REQUIREMENTS AND RELATED INFORMATION

1. Potential Subcontractor's Bid Response Due Date:

If you would like for our company to consider your company's bid for the subcontracting opportunity identified below in Item 2,

we must receive your bid response no later than _____ (Central Time) **on** _____ (Date (mm/dd/yyyy)).

In accordance with 34 TAC §20.285, each notice of subcontracting opportunity shall be provided to at least three (3) Texas certified HUBs, and allow the HUBs at least seven (7) working days to respond to the notice prior to submitting our bid response to the contracting agency. In addition, at least seven (7) working days prior to us submitting our bid response to the contracting agency, we must provide notice of each of our subcontracting opportunities to two (2) or more trade organizations or development centers (in Texas) that serves members of groups (i.e., Asian Pacific American, Black American, Hispanic American, Native American, Woman, Service Disabled Veteran) identified in Texas Administrative Code, §20.282(19)(C).

(A working day is considered a normal business day of a state agency, not including weekends, federal or state holidays, or days the agency is declared closed by its executive officer. The initial day the subcontracting opportunity notice is sent/provided to the HUBs and to the trade organizations or development centers is considered to be "day zero" and does not count as one of the seven (7) working days.)

2. Subcontracting Opportunity Scope of Work:

3. Required Qualifications: ☐ - Not Applicable

4. Bonding/Insurance Requirements: ☐ - Not Applicable

5. Location to review plans/specifications: ☐ - Not Applicable

DocuSign Envelope ID: 4D7A9C98-4F30-4D1D-907E-9A92F807637B

EXHIBIT J

HUB SUBCONTRACTING PLAN PROGRESS ASSESSMENT REPORT [FORM]

DocuSign Envelope ID: 4D7A9C98-4F30-4D1D-907E-9A92F807637B

HUB Subcontracting Plan (HSP)
Prime Contractor Progress Assessment Report

Rev. 10/16

This form must be completed and submitted to the contracting agency each month to document compliance with your HSP.

Contract/Requisition Number: _____ Date of Award: _____ Object Code: _____

Contracting Agency/University Name: _____

Contractor (Company) Name: _____ State of Texas VID #: _____

Point of Contact: _____ Phone #: _____

Reporting (Month) Period: _____ Total Amount Paid this Reporting Period to Contractor: $ -

Report HUB and Non-HUB subcontractor information

When verifying subcontractors' HUB status, ensure that you use the State of Texas' Centralized Master Bidders List (CMBL) - Historically Underutilized (HUB) Directory Search located at: http://mycpa.cpa.state.tx.us/tpasscmblsearch/index.jsp. HUB status code "A" signifies that the company is a Texas certified HUB.

Subcontractor's Name	Texas certified HUB (Yes or No)	Texas VID or federal EIN Do not enter Social Security Numbers. If you do not know their VID / EIN, leave their VID / EIN field blank.	Total Contract $ Amount from HSP with Subcontractor	Total $ Amount Paid this Reporting Period to Subcontractor	Total Contract $ Amount Paid to Date to Subcontractor	Object Code (Agency Use Only)
			$ -	$ -	$ -	
			$ -	$ -	$ -	
			$ -	$ -	$ -	
			$ -	$ -	$ -	
			$ -	$ -	$ -	
			$ -	$ -	$ -	
			$ -	$ -	$ -	
			$ -	$ -	$ -	
			$ -	$ -	$ -	
			$ -	$ -	$ -	
			$ -	$ -	$ -	
			$ -	$ -	$ -	
			$ -	$ -	$ -	
			$ -	$ -	$ -	
			$ -	$ -	$ -	
			$ -	$ -	$ -	
			$ -	$ -	$ -	
			$ -	$ -	$ -	
			$ -	$ -	$ -	
			$ -	$ -	$ -	
			$ -	$ -	$ -	
		TOTALS:	$ -	$ -	$ -	

Signature: _____ Title: _____ Date: _____